ASBESTOS AND LEAD MATERIALS SURVEY/TESTING REPORT

MUIR ELEMENTARY SCHOOL MODERNIZATION PROJECT
BUILDINGS 1, 2, 3, 4, 5, 6 AND 7
1951 MABURY STREET
SANTA ANA, CA 92705

SANTA ANA UNIFIED SCHOOL DISTRICT
1601 E. CHESTNUT AVENUE
SANTA ANA, CA 92701

BAINBRIDGE
Environmental Consultants

2670 North Main Street, Suite 320
Santa Ana, CA 92705
Ph: (714) 247-0024
Fax: (714) 247-0025

Bainbridge Project No.: 12014043.10

February 16, 2012

February 16, 2012

BAINBRIDGE
Environmental Consultants

Mr. Todd Butcher
Santa Ana Unified School District
1601 East Chestnut Avenue
Santa Ana, CA 92701

RE: Asbestos and lead based paint survey/testing consulting services for the Modernization Project located at Muir Elementary School Buildings 1, 2, 3, 4, 5, 6 and 7, 1951 Mabury Street, Santa Ana, CA 92705

Mr. Butcher:

At the request of the Santa Ana Unified School District, Bainbridge Environmental Consultants, Inc. (Bainbridge Environmental) conducted asbestos bulk sampling and lead XRF testing at Muir Elementary School located at the above mentioned address. The surveys were conducted on from February 7th thru the 9th, 2012.

This document has been prepared for the sole use of the Santa Ana Unified School District, their authorized agents, any State, or local agencies involved in this project. No other party should rely on the information contained herein without prior written consent of Bainbridge Environmental.

Thank you for the opportunity to provide services to the Santa Ana Unified School District. Please do not hesitate to call us with any questions. We look forward to assisting you in the future.

Sincerely,

BAINBRIDGE ENVIRONMENTAL CONSULTANTS, INC.

Henry A. Moreno
Principal/Program Manager
CAC #92-0618/03-3494/DPH I/A 9970

HAM/nm

Bainbridge Job #12014043.10

2670 N. Main Street, Suite 320, Santa Ana, CA 92705 (714) 247-0024, Fax (714) 247-0025

TABLE OF CONTENTS

Section **Page**

1.0 ASBESTOS SURVEY/INVESTIGATION 2
1.1 Asbestos Findings 2
1.2 Asbestos Recommendations 3
1.3 Disclaimer and Limitations for Asbestos Related Projects 4

2.0 LEAD PAINT XRF TESTING OF PAINTED SURFACES 5
2.1 Lead Findings 5
2.2 Lead Recommendations 6
2.3 Disclaimer and Limitations for Lead-Based Paint and Components 6

APPENDICES

APPENDIX

A ASBESTOS FIELD DATA AND LABORATORY RESULTS
B LEAD XRF FIELD DATA AND RESULTS
C ASBESTOS AND LEAD INSPECTOR'S CERTIFICATES
D FLOOR PLANS

1.0 Asbestos Survey/Investigation

Karlin Cisco (CSST) and Dan Mai Ha (CSST) of Bainbridge Environmental, under the supervision of Henry Moreno (CAC), performed the asbestos inspection/survey activities and collected the asbestos bulk samples for laboratory analysis of Buildings 1, 2, 3, 4, 5, 6 and 7 at Muir Elementary School, 1951 Mabury Street, Santa Ana, CA 92705. The survey was performed on from February 7th thru the 9th, 2012. The survey consisted of a walk-through of the buildings and sample collection of suspect asbestos containing materials (ACM). This report reviews and summarizes the findings outlined in the attached asbestos sample summary and laboratory report, as well as previous sampling performed on the buildings.

During this inspection, several criteria including bulk testing were used to properly assess areas sampled. Visual and tactile assessments of suspect materials provided the basis for these criteria and allowed the inspector to group the materials into homogenous areas.

1.1 Asbestos Findings

A total of one-hundred and eighty-three (183) bulk samples were collected and submitted under the chain of custody protocol to EMSL Analytical, Inc., Phoenix, Arizona. EMSL Analytical, Inc. is certified with the NVLAP registration and approved for asbestos bulk sample analysis in state of California. The sample analysis was performed by EPA Polarized Light Microscopy (PLM) coupled with dispersion staining, method 600/R-93/116, July 1993. All PLM analyses are derived from a calibrated visual estimate unless otherwise noted.

As a result, the materials tested below contain asbestos containing materials (ACM> .1%).

Sample ID No.	Building	Sample Location	Material Description/Color	Material Location	Approximate Combined Area Quantities	Asbestos Detected
--	Building 1	Inaccessible	Fire Doors	Throughout	--	Assumed
--	Building 3	Inaccessible	Fire Doors	Throughout	--	Assumed
--	Building 4	Inaccessible	Fire Doors	Throughout	--	Assumed
23a	Building 5	Rooftop at Pipe Penetration – South	Roof Penetration Paint/Silver	Roof Penetration Mastics Throughout	400 SF	2% Chrysotile
24a	Building 5	Rooftop at HVAC Penetration – West	Roof Penetration Paint/Silver			2% Chrysotile
25a	Building 5	Rooftop at Seams and Patches – Northwest	Roof Penetration Paint/Silver			2% Chrysotile
--	Building 5	Inaccessible	Fire Doors	Throughout	--	Assumed
1	Building 6	Exterior Wall – North	Stucco/Beige	Exterior Walls Throughout	20,000 SF	<1% Chrysotile
2	Building 6	Exterior Wall – Northeast	Stucco/Beige			<1% Chrysotile
6	Building 6	Exterior Wall - West	Stucco/Beige			<1% Chrysotile
14	Building 6	Classroom 112B – Breezeway	Vinyl Sheet Flooring/Yellow	Flooring Only	400 SF	15% Chrysotile
25	Building 6	Classroom 112B Window Base/Transom	Transite Window Panel	Window Bases/Transoms Throughout	400 SF	10% Chrysotile
26a	Building 6	Classroom 112b Floor Beneath Carpet	Vinyl Tile (VAT)/Off-White	Classroom 112B Flooring Throughout	500 SF	<1% Chrysotile
26b	Building 6	Classroom 112b Floor Beneath Carpet	Vinyl Tile (VAT) Mastic/Black			7% Chrysotile

Sample ID No.	Building	Sample Location	Material Description/Color	Material Location	Approximate Combined Area Quantities	Asbestos Detected
27a	Building 6	Classroom 112b Floor Beneath Carpet	Vinyl Tile (VAT)/Off-White	Classroom 112B Flooring Throughout	500 SF	<1% Chrysotile
27b	Building 6	Classroom 112b Floor Beneath Carpet	Vinyl Tile (VAT) Mastic/Black			7% Chrysotile
28a	Building 6	Classroom 112b Floor Beneath Carpet	Vinyl Tile (VAT)/Off-White			<1% Chrysotile
28b	Building 6	Classroom 112b Floor Beneath Carpet	Vinyl Tile (VAT) Mastic/Black			7% Chrysotile
--	Building 6	Inaccessible	Fire Doors	Throughout	--	Assumed
1a	Building 7	Exterior Wall – North	Stucco/Beige – Skim Coat/ Olive	Exterior Walls Throughout	10,000 SF	<1% Chrysotile
2a	Building 7	Exterior Wall – Northeast	Stucco/Beige – Skim Coat/ Olive			<1% Chrysotile
3a	Building 7	Exterior Wall – East	Stucco/Beige – Skim Coat/ Olive			<1% Chrysotile
4a	Building 7	Exterior Wall – South	Stucco/Beige – Skim Coat/ Olive			<1% Chrysotile
5a	Building 7	Exterior Wall – Southwest	Stucco/Beige – Skim Coat/ Olive			<1% Chrysotile
6a	Building 7	Exterior Wall – West	Stucco/Beige – Skim Coat/ Olive			<1% Chrysotile
8c	Building 7	Room 112 Wall	4" Rubber Basecove w Adhesive/Brown	Basecoves Throughout	2,400 LF	2% Anthophyllite
15c	Building 7	Room 124	12" Floor Tile Mastic/Black	12" Floor Tiles Throughout	800 SF	15% Chrysotile
16c	Building 7	Room 128	12" Floor Tile Mastic/Black			15% Chrysotile
17a	Building 7	Room 131/Storage Room Walls	Plaster/Gray – Skim Coat/Gray	Walls & Ceilings Throughout	3,000 SF	<1% Chrysotile
27	Building 7	Rooftop at Pipe Penetration – West	Roof Penetration Mastic/Black	Roof Penetration Mastic Throughout	400 SF	<1% Chrysotile
28	Building 7	Rooftop at Pipe Penetration – East	Roof Penetration Mastic/Black			<1% Chrysotile
--	Building 7	Inaccessible	Fire Doors	Throughout	--	Assumed

In the event that other materials are found to be similar or homogenous to the materials sampled and determined to contain asbestos, those similar or homogenous materials will be considered assumed asbestos containing materials. Prior to bid, contractor is responsible for field verification of those materials, their quantities and measurements.

Federal regulations define asbestos-containing materials as any material containing more than one percent (1%) by weight. California Labor Code, Section 6501.8 defines "asbestos containing construction materials (ACCM)" as any manufactured construction material that contains more than one tenth of one percent (0.1%) by weight.

1.2 Asbestos Recommendations

Based on the available information gathered during the performance of this survey and the conclusions, Bainbridge Environmental recommends the following:

- Identified asbestos-containing materials must be removed prior to any scheduled renovation or demolition in adherence with South Coast Air Quality Management District regulations.

- Bainbridge Environmental recommends the preparation of specifications for the removal of identified asbestos materials and Cal/OSHA regulated (samples greater than .1% asbestos), as necessary. A State of California Certified Asbestos Consultant should be retained to properly document, inspect, and monitor the removal of the asbestos materials. This is to ensure both adherence to applicable State and federal regulations and the safety of building occupants in the vicinity of the abatement areas.

- Bainbridge Environmental recommends that a Cal/OSHA registered and state contractor perform the abatement of the above-mentioned asbestos containing materials. Any asbestos related work must be conducted in accordance with all applicable federal, state, and local regulations. Firms performing the asbestos-related work must follow proper engineering practices and must use state-of-the-art techniques whenever possible.

1.3 Disclaimer and Limitations for Asbestos Related Projects

This document is prepared for the sole use of the Santa Ana Unified School District and its authorized representatives and any agencies directly involved in this project. No other party should rely on the information contained herein without prior written consent of Bainbridge Environmental.

The information in this report or portions there of may be required to be included in notifications to employees, contractors or other visitors to the building(s). The owner or its agents shall not use this report as a specification or work plan for any of the work suggested or recommended in the report.

This report is based upon conditions and practices observed at the property and information made available to Bainbridge Environmental Consultants, Inc. This report does not identify all hazards or unsafe practices, nor does it indicate that other hazards or unsafe practices exist at the premises.

The conclusions and summary presented in this report are based on a review of pertinent regulations, and guidelines or requirements commonly followed by industry standards, data collected during the site inspection, and information provided by the Santa Ana Unified School District, their clients, agents, and representatives.

The work has been conducted in an objective and unbiased manner and in accordance with generally accepted professional practice for this type of work. Bainbridge believes the data and analysis to be accurate and relevant, but cannot accept responsibility for the accuracy or completeness of available documentation or possible withholding of information by other parties.

Any observations of asbestos containing materials represent the conditions at the specified locations and times of the site inspection survey only. The selection of sample areas was limited to accessible areas of the property.

2.0 Lead Paint XRF Testing of Painted Surfaces

Karlin Cisco, Dan Mai Ha and Hector Gonzalez, of Bainbridge Environmental, under the supervision of Henry Moreno, DPH of Bainbridge conducted a lead-based paint (LBP) inspection survey of Buildings 1, 2, 3, 4, 5, 6 and 7 at Muir Elementary School located at 1951 Mabury Street, Santa Ana, CA 92705. The lead inspection/survey was conducted on February 7, 2012.

Bainbridge Environmental conducted the lead-based paint inspection of the site building(s) and property in compliance with the following Federal, State, and Local regulations:

- 24 CFR Part 35.80-35.98 and 35.3120(b) – U.S. Department of Housing and Urban Development (HUD)
- Toxic Substances Control Act (TOSCA) Section 406
- 40 CFR 745.103 – Environmental Protection Agency (EPA)
- Title 17 Section 35000 – Code of California Regulations
- Cal/OSHA Title 8 Section 1532.1 – California Occupational Safety and Health Administration
- Cal/OSHA Title 8 Section 5194 – California Occupational Safety and Health Administration

In compliance with Title 17, CCR, Division 1, Chapter 8 and 24 CFR Subtitle A, Part 35.125, Bainbridge filed the 8552 form as required to notify the California Department of Health Services the findings of the lead inspection/assessment conducted on the site.

Currently, the State of California, HUD, and the Environmental Protection Agency (EPA) define lead-based paint as paint or other surface coating with lead content equal to or greater than 1.0 milligram per square centimeter (mg/cm^2) of surface area or 5,000 parts per million lead on the surface area.

XRF Paint Readings: XRF measurements were collected. Bainbridge Environmental conducted the survey using a Niton XL 309 Spectrum Analyzer, X-ray Fluorescence (XRF) detector. All survey activities and XRF measurements were performed in accordance with the United States Department of Housing and Urban Development's guidance document, entitled Guidelines for the Evaluation and Control, (HUD Guidance Document).

2.1 Lead Findings

XRF Testing: The field data and results for XRF testing are included in Appendix B. Of two-hundred and forty-five (245) XRF readings collected, lead was detected in three (3) of the samples at or greater than 1.0 milligram per square centimeter.

Lead based paint was found in the following locations:

XLNo	Side	Building	Room	Source	Substrate	Color	Result
470	A	6	Exterior	Drinking Fountain Wall	4" x 4" Ceramic Tile	Green	7.8
523	B	7	Custodial Closet	Mop Sink	Porcelain	White	4.0
530	D	7	Entry	Door	Wood	Red	1.0

In the event that other materials are found to be similar or homogenous to the materials sampled and determined to contain lead, those similar or homogenous materials will be considered assumed lead containing materials. Prior to bid, contractor is responsible for field verification of those materials, their quantities and measurements.

2.2 Lead Recommendations

Based on the results of the LBP Inspection Bainbridge Environmental recommends:

- The removal of the identified lead components from the subject building prior to renovation. We further recommend the utilization of a licensed lead abatement contracting company to remove, transport and dispose of the lead waste according to applicable regulations.

- The Occupational Safety and Health Administration promulgated legislation (29 CFR 1926.62 and 8 CCR1532.1) entitled "Lead Exposure in Construction Industry", requires that any job that may potentially expose workers to any concentration of lead (i.e., >0.01 mg/cm^2) be monitored by the employer to determine workers eight-hour time weighted average (TWA) exposure to lead.

2.3 Disclaimer and Limitations for Lead-Based Paint and Components

This document is prepared for the sole use of Santa Ana School District and its authorized representatives and any agencies directly involved in this project. No other party should rely on the information contained herein without prior written consent of Bainbridge.
The information in this report or portions there of may be required to be included in notifications to employees, contractors or other visitors to the building(s). Santa Ana School District or its agents shall not use this report as a specification or work plan for any of the work suggested or recommended in the report.

This report is based upon conditions and practices observed at the property and information made available to Bainbridge Environmental Consultants, Inc. This report does not identify all hazards or unsafe practices, nor does it indicate that other hazards or unsafe practices exist at the premises.

This inspection and assessment was planned, developed, and patterned after the *HUD Guidelines in Chapter 7*. Bainbridge utilized state-of-the-art practices and techniques in accordance with regulatory standards while performing this inspection. Bainbridge's evaluation of the relative risk of exposure to lead identified during this inspection/risk assessment is based on conditions observed at the time of the inspection. Bainbridge cannot be responsible for changing conditions that may alter the relative exposure risk or for future changes in accepted methodology.

The conclusions and summary presented in this report are based on a review of pertinent regulations, and guidelines or requirements commonly followed by industry standards, data collected during the site inspection, and information provided by the Santa Ana Unified School District, their clients, agents, and representatives.

The work has been conducted in an objective and unbiased manner and in accordance with generally accepted professional practice for this type of work. Bainbridge believes the data and analysis to be accurate and relevant, but cannot accept responsibility for the accuracy or completeness of available documentation or possible withholding of information by other parties.

Any observations of lead-based paint and lead containing materials represent the conditions at the specified locations and times of the site inspection survey only. The selection of sample areas was limited to accessible areas of the property.

Muir Elementary School Inventory of Suspect & Non-Suspect 'ASBESTOS' Containing Building Materials

Material Description	Inspection Status
Glass	Not Tested
Wood	Not Tested
Steel	Not Tested
Aluminum HVAC Equipment	Not Tested
Fiberglass Insulated Pipe Runs	Not Tested
Metal Pipe-runs	Not Tested
Furniture	Not Tested
Carpet	Not Tested
Rubber Basecoves	Tested
Floor Tiles with Mastic	Tested
Texture Coat	Tested
Plaster	Tested
Gypsum Board	Tested
12 inch Ceiling Tiles	Tested
12 inch Pin Hole Ceiling Tiles with Puck Mastic	Tested
Fire Rated Doors	Assumed
T/G Rolled Roofing	Tested
Roofing Paint	Tested
Window Putty	Tested
Roofing Penetration Mastic	Tested
Tar	Tested
Stucco	Tested
Gypsum Wall Panels	Tested
Copper Pipe	Not Tested
Galvanized Steel Ducting	Not Tested
Drywall w Joint Compound	Tested
Window Putty	Tested

Muir Elementary School Inventory of Suspect & Non-Suspect 'LEAD' Containing Building Materials

Material Description	Inspection Status
Glass	Not Tested
(Painted) Wood Frames & Beams	Tested
Steel	Not Tested
(Un-Painted) Aluminum HVAC Equipment	Not Tested
Fiberglass Insulated Pipe Runs	Not Tested
(Un-Painted) Metal Pipe-runs	Not Tested
(New) Furniture	Not Tested
Carpet	Not Tested
Rubber Basecoves	Not Tested
(Painted) Floor Tiles with Mastic	Tested
(Painted) Texture Coat	Tested
(Painted) Plaster	Tested
(Painted) Gypsum Board	Tested
12 inch Ceiling Tiles	Not Tested
2' x 4' Ceiling Panels	Not Tested
(Painted) Wood Doors	Tested
T/G Rolled Roofing	Not Tested
Poxy	Not Tested
Window Putty	Not Tested
Roofing Penetration Mastic	Not Tested
Tar	Not Tested
(Painted) Stucco	Tested
(Painted) Gypsum Wall Panels	Tested
Copper Pipe	Not Tested
(Painted) Galvanized Steel Ducting	Tested
(Painted) Drywall w Joint Compound	Tested
(Painted)Textured Fiber Board	Tested
(Painted) Base & Full-Height Cabinets	Tested
Porcelain Toilets	Tested
Porcelain Sinks	Tested
Ceramic Tiles	Tested
Restoom Stalls	Tested
Decortive Wood Trims	Tested

APPENDIX A

ASBESTOS FIELD DATA AND LABORATORY RESULTS

ASBESTOS BULK SAMPLE

Client: SAUSD
Project Name: Muir ES Building 1
Address: 1951 Mabury Street
Santa Ana, CA 92705

BEC Project Number: 12014043.10
Inspector/Sampler: D. Mai Ha/K. Cisco
Date Sampled: 2/8/2012

BAINBRIDGE
Environmental Consultants

Sample Number	Building	Sample Location	Sample Description/Color	Material Location	Approx. Quantity	Results
1	Building 1	Exterior Wall-North	Stucco/Beige	Exterior Walls Throughout	-	None Detected
2	Building 1	Exterior Wall-Northeast	Stucco/Beige		-	None Detected
3	Building 1	Exterior Wall-East	Stucco/Beige		-	None Detected
4	Building 1	Exterior Wall-South	Stucco/Beige		-	None Detected
5	Building 1	Exterior Wall-Southeast	Stucco/Beige		-	None Detected
6	Building 1	Exterior Wall-West	Stucco/Beige		-	None Detected
7	Building 1	Exterior Wall-West	Stucco/Beige		-	None Detected
8	Building 1	(South) Hallway Wall	4" Rubber Basecove w Adhesive/Gray	Basecoves Throughout	-	None Detected
9	Building 1	(North) Hallway Wall	4" Rubber Basecove w Adhesive/Gray		-	None Detected
10	Building 1	Conference Room Wall	4" Rubber Basecove w Adhesive/Gray		-	None Detected
11	Building 1	(South) Hallway Wall	Drywall w Joint Compound	Walls & Ceilings Throughout	-	None Detected
12	Building 1	Nurse Office Wall	Drywall w Joint Compound		-	None Detected
13	Building 1	Tele. Room Wall	Drywall w Joint Compound		-	None Detected
14	Building 1	AD.Stor/Records Ceiling	2' x 4' Ceiling Panel/White	Drop Ceilings Throughout	-	None Detected
15	Building 1	(South) Hallway Ceiling-East	2' x 4' Ceiling Panel/White		-	None Detected

2670 North Main Street, Suite 320
Santa Ana, CA 92705

(714) 247-0024
Fax (714) 247-0025

ASBESTOS BULK SAMPLE

SAUSD – Muir Elementary School

BAINBRIDGE
Environmental Consultants

Sample Number	Building	Sample Location	Sample Description/Color	Material Location	Approx. Quantity	Results
16	Building 1	Nurse Office Ceiling	2' x 4' Ceiling Panel/White	Drop Ceilings Throughout	-	None Detected
17	Building 1	Cust. Room Floor	12-inch Floor Tile w Mastic/Gray	12-inch Floor Tiles Throughout	-	None Detected
18	Building 1	Nurse Office Floor	12-inch Floor Tile w Mastic/Gray		-	None Detected
19	Building 1	Nurse Office Floor	12-inch Floor Tile w Mastic/Gray		-	None Detected
20	Building 1	Cust. Room Walls	Plaster/Brown	Plaster Walls Throughout	-	None Detected
21	Building 1	Cust. Room Walls	Plaster/Brown		-	None Detected
22	Building 1	Cust. Room Walls	Plaster/Brown		-	None Detected
--	Building 1	Inaccessible	Fire Doors	Throughout Building	--	Assumed

2670 North Main Street, Suite 320
Santa Ana, CA 92705

(714) 247-0024
Fax (714) 247-0025

EMSL Analytical, Inc.
3356 West Catalina Drive, Phoenix, AZ 85017
Phone/Fax: (602) 276-4344 / (602) 276-4053
www.emsl.com phoenixlab@emsl.com

EMSL Order:	121200563
CustomerID:	32BAIN21
CustomerPO:	
ProjectID:	

Attn: **Dan Maiha**
Bainbridge Environmental Consultants
2670 North Main Street
Suite 320
Santa Ana, CA 92705

Phone:	(714) 247-0024
Fax:	(714) 247-0025
Received:	02/13/12 10:00 AM
Analysis Date:	2/14/2012
Collected:	

Project: **Muir ES Building 1**

Test Report: Asbestos Analysis of Bulk Materials via EPA 600/R-93/116 and/or EPA 600/M4-82-020 Method(s) using Polarized Light Microscopy

Sample	Description	Appearance	Non-Asbestos % Fibrous	Non-Asbestos % Non-Fibrous	Asbestos % Type
1 *121200563-0001*	Stucco/Beige - Exterior Wall-North	Gray Non-Fibrous Homogeneous		100% Non-fibrous (other)	**None Detected**
2 *121200563-0002*	Stucco/Beige - Exterior Wall-Northeast	Gray Non-Fibrous Homogeneous		100% Non-fibrous (other)	**None Detected**
3-Skim Coat *121200563-0003*	Stucco/Beige - Exterior Wall-East	Beige Non-Fibrous Homogeneous		100% Non-fibrous (other)	**None Detected**
3-Base Coat *121200563-0003A*	Stucco/Beige - Exterior Wall-East	Gray Non-Fibrous Homogeneous		100% Non-fibrous (other)	**None Detected**
4-Skim Coat *121200563-0004*	Stucco/Beige - Exterior Wall-South	Beige Non-Fibrous Homogeneous		100% Non-fibrous (other)	**None Detected**
4-Base Coat *121200563-0004A*	Stucco/Beige - Exterior Wall-South	Gray Non-Fibrous Homogeneous		100% Non-fibrous (other)	**None Detected**
5 *121200563-0005*	Stucco/Beige - Exterior Wall-Southeast	Gray Non-Fibrous Homogeneous		100% Non-fibrous (other)	**None Detected**

Analyst(s)

Carlos Rivadeneyra (11)
Mike J. Williams (25)

Michelle Wilson

Michelle Wilson, Laboratory Manager
or other approved signatory

EMSL maintains liability limited to cost of analysis. This report relates only to the samples reported and may not be reproduced, except in full, without written approval by EMSL. EMSL bears no responsibility for sample collection activities or analytical method limitations. Interpretation and use of test results are the responsibility of the client. This report must not be used by the client to claim product certification, approval, or endorsement by NVLAP, NIST or any agency of the federal government. Non-friable organically bound materials present a problem matrix and therefore EMSL recommends gravimetric reduction prior to analysis. Samples received in good condition unless otherwise noted. Estimated accuracy, precision and uncertainty data available upon request.
Samples analyzed by EMSL Analytical, Inc. Phoenix, AZ NVLAP Lab Code 200811-0, AZ0937

Initial report from 02/14/2012 09:34:05

EMSL Analytical, Inc.
3356 West Catalina Drive, Phoenix, AZ 85017
Phone/Fax: (602) 276-4344 / (602) 276-4053
www.emsl.com phoenixlab@emsl.com

EMSL Order:	121200563
CustomerID:	32BAIN21
CustomerPO:	
ProjectID:	

Attn: **Dan Maiha**
Bainbridge Environmental Consultants
2670 North Main Street
Suite 320
Santa Ana, CA 92705

Phone:	(714) 247-0024
Fax:	(714) 247-0025
Received:	02/13/12 10:00 AM
Analysis Date:	2/14/2012
Collected:	

Project: **Muir ES Building 1**

Test Report: Asbestos Analysis of Bulk Materials via EPA 600/R-93/116 and/or EPA 600/M4-82-020 Method(s) using Polarized Light Microscopy

			Non-Asbestos		Asbestos
Sample	**Description**	**Appearance**	**% Fibrous**	**% Non-Fibrous**	**% Type**
6-Skim Coat *121200563-0006*	Stucco/Beige - Exterior Wall-West	Beige Non-Fibrous Homogeneous		100% Non-fibrous (other)	**None Detected**
6-Base Coat *121200563-0006A*	Stucco/Beige - Exterior Wall-West	Gray Non-Fibrous Homogeneous		100% Non-fibrous (other)	**None Detected**
7 *121200563-0007*	Stucco/Beige - Exterior Wall-West	Gray Non-Fibrous Homogeneous		100% Non-fibrous (other)	**None Detected**
8-Basecove *121200563-0008*	4" Rubber Basecove W Adhesive/Gray - (South) Hallway Wall	Gray Non-Fibrous Homogeneous		100% Non-fibrous (other)	**None Detected**
8-Adhesive *121200563-0008A*	4" Rubber Basecove W Adhesive/Gray - (South) Hallway Wall	White Non-Fibrous Homogeneous		100% Non-fibrous (other)	**None Detected**
9-Basecove *121200563-0009*	4" Rubber Basecove W Adhesive/Gray - (North) Hallway Wall	Gray Non-Fibrous Homogeneous		100% Non-fibrous (other)	**None Detected**

Analyst(s)

Carlos Rivadeneyra (11)
Mike J. Williams (25)

Michelle Wilson

Michelle Wilson, Laboratory Manager
or other approved signatory

EMSL maintains liability limited to cost of analysis. This report relates only to the samples reported and may not be reproduced, except in full, without written approval by EMSL. EMSL bears no responsibility for sample collection activities or analytical method limitations. Interpretation and use of test results are the responsibility of the client. This report must not be used by the client to claim product certification, approval, or endorsement by NVLAP, NIST or any agency of the federal government. Non-friable organically bound materials present a problem matrix and therefore EMSL recommends gravimetric reduction prior to analysis. Samples received in good condition unless otherwise noted. Estimated accuracy, precision and uncertainty data available upon request.
Samples analyzed by EMSL Analytical, Inc. Phoenix, AZ NVLAP Lab Code 200811-0, AZ0937

Initial report from 02/14/2012 09:34:05

EMSL Analytical, Inc.
3356 West Catalina Drive, Phoenix, AZ 85017
Phone/Fax: (602) 276-4344 / (602) 276-4053
www.emsl.com phoenixlab@emsl.com

EMSL Order:	121200563
CustomerID:	32BAIN21
CustomerPO:	
ProjectID:	

Attn: **Dan Maiha**
Bainbridge Environmental Consultants
2670 North Main Street
Suite 320
Santa Ana, CA 92705

Phone:	(714) 247-0024
Fax:	(714) 247-0025
Received:	02/13/12 10:00 AM
Analysis Date:	2/14/2012
Collected:	

Project: **Muir ES Building 1**

Test Report: Asbestos Analysis of Bulk Materials via EPA 600/R-93/116 and/or EPA 600/M4-82-020 Method(s) using Polarized Light Microscopy

Sample	Description	Appearance	Non-Asbestos %	Fibrous	Non-Asbestos %	Non-Fibrous	Asbestos % Type
9-Adhesive *121200563-0009A*	4" Rubber Basecove W Adhesive/Gray - (North) Hallway Wall	White Non-Fibrous Homogeneous			100%	Non-fibrous (other)	**None Detected**
10-Basecove *121200563-0010*	4" Rubber Basecove W Adhesive/Gray - Conference Room Wall	Gray Non-Fibrous Homogeneous			100%	Non-fibrous (other)	**None Detected**
10-Adhesive *121200563-0010A*	4" Rubber Basecove W Adhesive/Gray - Conference Room Wall	White Non-Fibrous Homogeneous			100%	Non-fibrous (other)	**None Detected**
11-Drywall *121200563-0011*	Drywall W Joint Compound - (South) Hallway Wall	Brown/White Fibrous Heterogeneous	10% 2%	Cellulose Glass	3% 85%	Non-fibrous (other) Gypsum	**None Detected**
11-Joint Compound *121200563-0011A*	Drywall W Joint Compound - (South) Hallway Wall	White Non-Fibrous Homogeneous			100%	Non-fibrous (other)	**None Detected**
12-Drywall *121200563-0012*	Drywall W Joint Compound - Nurse Office Wall	Brown/White Fibrous Heterogeneous	10% 2%	Cellulose Glass	3% 85%	Non-fibrous (other) Gypsum	**None Detected**

Analyst(s)

Carlos Rivadeneyra (11)
Mike J. Williams (25)

Michelle Wilson

Michelle Wilson, Laboratory Manager
or other approved signatory

EMSL maintains liability limited to cost of analysis. This report relates only to the samples reported and may not be reproduced, except in full, without written approval by EMSL. EMSL bears no responsibility for sample collection activities or analytical method limitations. Interpretation and use of test results are the responsibility of the client. This report must not be used by the client to claim product certification, approval, or endorsement by NVLAP, NIST or any agency of the federal government. Non-friable organically bound materials present a problem matrix and therefore EMSL recommends gravimetric reduction prior to analysis. Samples received in good condition unless otherwise noted. Estimated accuracy, precision and uncertainty data available upon request.
Samples analyzed by EMSL Analytical, Inc. Phoenix, AZ NVLAP Lab Code 200811-0, AZ0937

Initial report from 02/14/2012 09:34:05

EMSL Analytical, Inc.
3356 West Catalina Drive, Phoenix, AZ 85017
Phone/Fax: (602) 276-4344 / (602) 276-4053
www.emsl.com phoenixlab@emsl.com

EMSL Order:	121200563
CustomerID:	32BAIN21
CustomerPO:	
ProjectID:	

Attn: **Dan Maiha**
Bainbridge Environmental Consultants
2670 North Main Street
Suite 320
Santa Ana, CA 92705

Phone:	(714) 247-0024
Fax:	(714) 247-0025
Received:	02/13/12 10:00 AM
Analysis Date:	2/14/2012
Collected:	

Project: **Muir ES Building 1**

Test Report: Asbestos Analysis of Bulk Materials via EPA 600/R-93/116 and/or EPA 600/M4-82-020 Method(s) using Polarized Light Microscopy

Sample	Description	Appearance	Non-Asbestos %	Fibrous	Non-Asbestos %	Non-Fibrous	Asbestos % Type
12-Joint Compound *121200563-0012A*	Drywall W Joint Compound - Nurse Office Wall	White Non-Fibrous Homogeneous			100%	Non-fibrous (other)	**None Detected**
13-Drywall *121200563-0013*	Drywall W Joint Compound - Tele. Room Wall	Brown/White Fibrous Heterogeneous	10% 2%	Cellulose Glass	3% 85%	Non-fibrous (other) Gypsum	**None Detected**
13-Joint Compound *121200563-0013A*	Drywall W Joint Compound - Tele. Room Wall	White Non-Fibrous Homogeneous			100%	Non-fibrous (other)	**None Detected**
14 *121200563-0014*	2'x4' Ceiling Panel/White - AD.Stor/Records Ceiling	White Fibrous Homogeneous	90%	Min. Wool	10%	Non-fibrous (other)	**None Detected**
15 *121200563-0015*	2'x4' Ceiling Panel/White - (South) Hallway Ceiling-East	White Fibrous Homogeneous	90%	Min. Wool	10%	Non-fibrous (other)	**None Detected**
16 *121200563-0016*	2'x4' Ceiling Panel/White - Nurse Office Ceiling	White Fibrous Homogeneous	90%	Min. Wool	10%	Non-fibrous (other)	**None Detected**
17-Floor Tile *121200563-0017*	12-Inch Floor W Mastic/Gray - Cust. Room Floor	Gray Non-Fibrous Homogeneous			100%	Non-fibrous (other)	**None Detected**

Analyst(s)

Carlos Rivadeneyra (11)
Mike J. Williams (25)

Michelle Wilson

Michelle Wilson, Laboratory Manager
or other approved signatory

EMSL maintains liability limited to cost of analysis. This report relates only to the samples reported and may not be reproduced, except in full, without written approval by EMSL. EMSL bears no responsibility for sample collection activities or analytical method limitations. Interpretation and use of test results are the responsibility of the client. This report must not be used by the client to claim product certification, approval, or endorsement by NVLAP, NIST or any agency of the federal government. Non-friable organically bound materials present a problem matrix and therefore EMSL recommends gravimetric reduction prior to analysis. Samples received in good condition unless otherwise noted. Estimated accuracy, precision and uncertainty data available upon request.
Samples analyzed by EMSL Analytical, Inc. Phoenix, AZ NVLAP Lab Code 200811-0, AZ0937

Initial report from 02/14/2012 09:34:05

EMSL Analytical, Inc.
3356 West Catalina Drive, Phoenix, AZ 85017
Phone/Fax: (602) 276-4344 / (602) 276-4053
www.emsl.com phoenixlab@emsl.com

EMSL Order:	121200563
CustomerID:	32BAIN21
CustomerPO:	
ProjectID:	

Attn: **Dan Maiha**
Bainbridge Environmental Consultants
2670 North Main Street
Suite 320
Santa Ana, CA 92705

Phone:	(714) 247-0024
Fax:	(714) 247-0025
Received:	02/13/12 10:00 AM
Analysis Date:	2/14/2012
Collected:	

Project: **Muir ES Building 1**

Test Report: Asbestos Analysis of Bulk Materials via EPA 600/R-93/116 and/or EPA 600/M4-82-020 Method(s) using Polarized Light Microscopy

Sample	Description	Appearance	Non-Asbestos % Fibrous	Non-Asbestos % Non-Fibrous	Asbestos % Type
17-Mastic *121200563-0017A*	12-Inch Floor W Mastic/Gray - Cust. Room Floor	Tan Non-Fibrous Homogeneous		100% Non-fibrous (other)	**None Detected**
17-Leveler *121200563-0017B*	12-Inch Floor W Mastic/Gray - Cust. Room Floor	Gray Non-Fibrous Homogeneous		100% Non-fibrous (other)	**None Detected**
18-Floor Tile *121200563-0018*	12-Inch Floor W Mastic/Gray - Nurse Office Floor	Gray Non-Fibrous Homogeneous		100% Non-fibrous (other)	**None Detected**
18-Mastic *121200563-0018A*	12-Inch Floor W Mastic/Gray - Nurse Office Floor	Tan Non-Fibrous Homogeneous		100% Non-fibrous (other)	**None Detected**
19-Floor Tile *121200563-0019*	12-Inch Floor W Mastic/Gray - Nurse Office Floor	Gray Non-Fibrous Homogeneous		100% Non-fibrous (other)	**None Detected**
19-Mastic *121200563-0019A*	12-Inch Floor W Mastic/Gray - Nurse Office Floor	Tan Non-Fibrous Homogeneous		100% Non-fibrous (other)	**None Detected**
20 *121200563-0020*	Plaster/Brown - Cust. Room Walls	White Non-Fibrous Homogeneous		100% Non-fibrous (other)	**None Detected**

Analyst(s)

Carlos Rivadeneyra (11)
Mike J. Williams (25)

Michelle Wilson

Michelle Wilson, Laboratory Manager
or other approved signatory

EMSL maintains liability limited to cost of analysis. This report relates only to the samples reported and may not be reproduced, except in full, without written approval by EMSL. EMSL bears no responsibility for sample collection activities or analytical method limitations. Interpretation and use of test results are the responsibility of the client. This report must not be used by the client to claim product certification, approval, or endorsement by NVLAP, NIST or any agency of the federal government. Non-friable organically bound materials present a problem matrix and therefore EMSL recommends gravimetric reduction prior to analysis. Samples received in good condition unless otherwise noted. Estimated accuracy, precision and uncertainty data available upon request.
Samples analyzed by EMSL Analytical, Inc. Phoenix, AZ NVLAP Lab Code 200811-0, AZ0937

Initial report from 02/14/2012 09:34:05

EMSL Analytical, Inc.
3356 West Catalina Drive, Phoenix, AZ 85017
Phone/Fax: (602) 276-4344 / (602) 276-4053
www.emsl.com phoenixlab@emsl.com

EMSL Order:	121200563
CustomerID:	32BAIN21
CustomerPO:	
ProjectID:	

Attn: **Dan Maiha**
Bainbridge Environmental Consultants
2670 North Main Street
Suite 320
Santa Ana, CA 92705

Phone:	(714) 247-0024
Fax:	(714) 247-0025
Received:	02/13/12 10:00 AM
Analysis Date:	2/14/2012
Collected:	

Project: **Muir ES Building 1**

Test Report: Asbestos Analysis of Bulk Materials via EPA 600/R-93/116 and/or EPA 600/M4-82-020 Method(s) using Polarized Light Microscopy

			Non-Asbestos		Asbestos
Sample	**Description**	**Appearance**	**% Fibrous**	**% Non-Fibrous**	**% Type**
21-Skim Coat *121200563-0021*	Plaster/Brown - Cust. Room Walls	White Non-Fibrous Homogeneous		100% Non-fibrous (other)	**None Detected**
21-Base Coat *121200563-0021A*	Plaster/Brown - Cust. Room Walls	Gray Non-Fibrous Homogeneous		100% Non-fibrous (other)	**None Detected**
22 *121200563-0022*	Plaster/Brown - Cust. Room Walls	White Non-Fibrous Homogeneous		100% Non-fibrous (other)	**None Detected**

Analyst(s)

Carlos Rivadeneyra (11)
Mike J. Williams (25)

Michelle Wilson

Michelle Wilson, Laboratory Manager
or other approved signatory

EMSL maintains liability limited to cost of analysis. This report relates only to the samples reported and may not be reproduced, except in full, without written approval by EMSL. EMSL bears no responsibility for sample collection activities or analytical method limitations. Interpretation and use of test results are the responsibility of the client. This report must not be used by the client to claim product certification, approval, or endorsement by NVLAP, NIST or any agency of the federal government. Non-friable organically bound materials present a problem matrix and therefore EMSL recommends gravimetric reduction prior to analysis. Samples received in good condition unless otherwise noted. Estimated accuracy, precision and uncertainty data available upon request.
Samples analyzed by EMSL Analytical, Inc. Phoenix, AZ NVLAP Lab Code 200811-0, AZ0937

Initial report from 02/14/2012 09:34:05

THIS IS THE LAST PAGE OF THE REPORT.

ASBESTOS BULK SAMPLE

Client: SAUSD
Project Name: Muir ES Building 2
Address: 1951 Mabury Street
Santa Ana, Ca.

BEC Project Number: 12014043.10
Inspector/Sampler: D. Mai Ha
Date Sampled: 2/7/2012

BAINBRIDGE
Environmental Consultants

Sample Number	Building	Sample Location	Sample Description/Color	Material Location	Approx. Quantity	Results
1	Building 2	Exterior Wall-North	Stucco/Beige	Exterior Walls Throughout	-	None Detected
2	Building 2	Exterior Wall-East	Stucco/Beige		-	None Detected
3	Building 2	Exterior Wall-West	Stucco/Beige		-	None Detected
4	Building 2	Exterior Wall-South	Stucco/Beige		-	None Detected
5	Building 2	Exterior Wall-Southeast	Stucco/Beige		-	None Detected
6	Building 2	Exterior Wall-Southwest	Stucco/Beige		-	None Detected
7	Building 2	Exterior Wall-Northeast	Stucco/Beige		-	None Detected
8	Building 2	MRP Seating Area Drop Ceiling-W	2' x 4' Ceiling Tile/White	Drop Ceilings Throughout	-	None Detected
9	Building 2	MRP Seating Area Drop Ceiling-E	2' x 4' Ceiling Tile/White		-	None Detected
10	Building 2	MRP Seating Area Drop Ceiling-W	2' x 4' Ceiling Tile/White		-	None Detected
11	Building 2	MPR Above Drop Ceiling-W	Fire Rated Gypsum Board/White	Fire Walls Throughout	-	None Detected
12	Building 2	MPR Above Drop Ceiling-W	Fire Rated Gypsum Board/White		-	None Detected
13	Building 2	MPR Above Drop Ceiling-W	Fire Rated Gypsum Board/White		-	None Detected
14	Building 2	MPR Seating Area Wall-E	4" Rubber Basecove w Adhesive	Basecoves Throughout	-	None Detected
15	Building 2	MPR Seating Area Wall-West	4" Rubber Basecove w Adhesive		-	None Detected
16	Building 2	MPR Stairway Wall-West	4" Rubber Basecove w Adhesive		-	None Detected

2670 North Main Street, Suite 320
Santa Ana, CA 92705

(714) 247-0024
Fax (714) 247-0025

ASBESTOS BULK SAMPLE

SAUSD – Muir Elementary School

BAINBRIDGE
Environmental Consultants

Sample Number	Building	Sample Location	Sample Description/Color	Material Location	Approx. Quantity	Results
17	Building 2	MPR Ceiling-East	12" Ceiling Tile/White w Puck Mastic/Brown	MPR Ceiling	-	None Detected
18	Building 2	MPR Ceiling-West	12" Ceiling Tile/White w Puck Mastic/Brown		-	None Detected
19	Building 2	MPR Ceiling-North	12" Ceiling Tile/White w Puck Mastic/Brown		-	None Detected
20	Building 2	Custodian Room Wall	Drywall w Joint Compound	Walls & Ceilings Throughout	-	None Detected
21	Building 2	Stage Wall-North	Drywall w Joint Compound		-	None Detected
22	Building 2	Stage Stairway Wall	Drywall w Joint Compound		-	None Detected

2670 North Main Street, Suite 320
Santa Ana, CA 92705

(714) 247-0024
Fax (714) 247-0025

EMSL Analytical, Inc.
3356 West Catalina Drive, Phoenix, AZ 85017
Phone/Fax: (602) 276-4344 / (602) 276-4053
www.emsl.com phoenixlab@emsl.com

EMSL Order:	121200561
CustomerID:	32BAIN21
CustomerPO:	
ProjectID:	

Attn: **Dan Maiha**
Bainbridge Environmental Consultants
2670 North Main Street
Suite 320
Santa Ana, CA 92705

Phone:	(714) 247-0024
Fax:	(714) 247-0025
Received:	02/13/12 10:00 AM
Analysis Date:	2/13/2012
Collected:	

Project: **Muir ES Building 2**

Test Report: Asbestos Analysis of Bulk Materials via EPA 600/R-93/116 and/or EPA 600/M4-82-020 Method(s) using Polarized Light Microscopy

Sample	Description	Appearance	Non-Asbestos % Fibrous	Non-Asbestos % Non-Fibrous	Asbestos % Type
1 *121200561-0001*	Stucco/Beige - Exterior Wall-North	Gray Non-Fibrous Homogeneous		100% Non-fibrous (other)	**None Detected**
2 *121200561-0002*	Stucco/Beige - Exterior Wall-East	Gray/White/Beige Non-Fibrous Heterogeneous		100% Non-fibrous (other)	**None Detected**
3 *121200561-0003*	Stucco/Beige - Exterior Wall-West	Gray/White Non-Fibrous Heterogeneous		100% Non-fibrous (other)	**None Detected**
4 *121200561-0004*	Stucco/Beige - Exterior Wall-South	Gray/Beige Non-Fibrous Heterogeneous		100% Non-fibrous (other)	**None Detected**
5-Skim Coat *121200561-0005*	Stucco/Beige - Exterior Wall-Southeast	Beige Non-Fibrous Homogeneous		100% Non-fibrous (other)	**None Detected**
5-Base Coat *121200561-0005A*	Stucco/Beige - Exterior Wall-Southeast	Gray Non-Fibrous Homogeneous		100% Non-fibrous (other)	**None Detected**
6-Skim Coat *121200561-0006*	Stucco/Beige - Exterior Wall-Southwest	Beige Non-Fibrous Homogeneous		100% Non-fibrous (other)	**None Detected**

Analyst(s)

Amanda Lang (18)
Carlos Rivadeneyra (13)

Michelle Wilson

Michelle Wilson, Laboratory Manager
or other approved signatory

EMSL maintains liability limited to cost of analysis. This report relates only to the samples reported and may not be reproduced, except in full, without written approval by EMSL. EMSL bears no responsibility for sample collection activities or analytical method limitations. Interpretation and use of test results are the responsibility of the client. This report must not be used by the client to claim product certification, approval, or endorsement by NVLAP, NIST or any agency of the federal government. Non-friable organically bound materials present a problem matrix and therefore EMSL recommends gravimetric reduction prior to analysis. Samples received in good condition unless otherwise noted. Estimated accuracy, precision and uncertainty data available upon request.
Samples analyzed by EMSL Analytical, Inc. Phoenix, AZ NVLAP Lab Code 200811-0, AZ0937

Initial report from 02/14/2012 09:13:17

EMSL Analytical, Inc.
3356 West Catalina Drive, Phoenix, AZ 85017
Phone/Fax: (602) 276-4344 / (602) 276-4053
www.emsl.com phoenixlab@emsl.com

EMSL Order:	121200561
CustomerID:	32BAIN21
CustomerPO:	
ProjectID:	

Attn: **Dan Maiha**
Bainbridge Environmental Consultants
2670 North Main Street
Suite 320
Santa Ana, CA 92705

Phone:	(714) 247-0024
Fax:	(714) 247-0025
Received:	02/13/12 10:00 AM
Analysis Date:	2/13/2012
Collected:	

Project: **Muir ES Building 2**

Test Report: Asbestos Analysis of Bulk Materials via EPA 600/R-93/116 and/or EPA 600/M4-82-020 Method(s) using Polarized Light Microscopy

Sample	Description	Appearance	Non-Asbestos %	Fibrous	Non-Asbestos %	Non-Fibrous	Asbestos % Type
6-Base Coat *121200561-0006A*	Stucco/Beige - Exterior Wall-Southwest	Gray Non-Fibrous Homogeneous			100%	Non-fibrous (other)	**None Detected**
7 *121200561-0007*	Stucco/Beige - Exterior Wall-Northeast	Gray Non-Fibrous Heterogeneous			100%	Non-fibrous (other)	**None Detected**
8 *121200561-0008*	2'x4' Ceiling Tile/White - MRP Seating Area Drop Ceiling-W	Gray Fibrous Homogeneous	95%	Min. Wool	5%	Non-fibrous (other)	**None Detected**
9 *121200561-0009*	2'x4' Ceiling Tile/White - MRP Seating Area Drop Ceiling-E	Gray Fibrous Homogeneous	95%	Min. Wool	5%	Non-fibrous (other)	**None Detected**
10 *121200561-0010*	2'x4' Ceiling Tile/White - MRP Seating Area Drop Ceiling-W	Gray Fibrous Homogeneous	95%	Min. Wool	5%	Non-fibrous (other)	**None Detected**
11 *121200561-0011*	Fire Rated Gypsum Board/White - MPR Above Drop Ceiling-W	Brown/White Fibrous Heterogeneous	10% 2%	Cellulose Glass	3% 85%	Non-fibrous (other) Gypsum	**None Detected**

Analyst(s)

Amanda Lang (18)
Carlos Rivadeneyra (13)

Michelle Wilson

Michelle Wilson, Laboratory Manager
or other approved signatory

EMSL maintains liability limited to cost of analysis. This report relates only to the samples reported and may not be reproduced, except in full, without written approval by EMSL. EMSL bears no responsibility for sample collection activities or analytical method limitations. Interpretation and use of test results are the responsibility of the client. This report must not be used by the client to claim product certification, approval, or endorsement by NVLAP, NIST or any agency of the federal government. Non-friable organically bound materials present a problem matrix and therefore EMSL recommends gravimetric reduction prior to analysis. Samples received in good condition unless otherwise noted. Estimated accuracy, precision and uncertainty data available upon request.
Samples analyzed by EMSL Analytical, Inc. Phoenix, AZ NVLAP Lab Code 200811-0, AZ0937

Initial report from 02/14/2012 09:13:17

EMSL Analytical, Inc.
3356 West Catalina Drive, Phoenix, AZ 85017
Phone/Fax: (602) 276-4344 / (602) 276-4053
www.emsl.com phoenixlab@emsl.com

EMSL Order:	121200561
CustomerID:	32BAIN21
CustomerPO:	
ProjectID:	

Attn: **Dan Maiha**
Bainbridge Environmental Consultants
2670 North Main Street
Suite 320
Santa Ana, CA 92705

Phone:	(714) 247-0024
Fax:	(714) 247-0025
Received:	02/13/12 10:00 AM
Analysis Date:	2/13/2012
Collected:	

Project: **Muir ES Building 2**

Test Report: Asbestos Analysis of Bulk Materials via EPA 600/R-93/116 and/or EPA 600/M4-82-020 Method(s) using Polarized Light Microscopy

Sample	Description	Appearance	Non-Asbestos % Fibrous	Non-Asbestos % Non-Fibrous	Asbestos % Type
12 *121200561-0012*	Fire Rated Gypsum Board/White - MPR Above Drop Ceiling-W	Brown/White Fibrous Heterogeneous	10% Cellulose 2% Glass	3% Non-fibrous (other) 85% Gypsum	**None Detected**
13 *121200561-0013*	Fire Rated Gypsum Board/White - MPR Above Drop Ceiling-W	Brown/White Fibrous Heterogeneous	10% Cellulose 2% Glass	3% Non-fibrous (other) 85% Gypsum	**None Detected**
14-Basecove *121200561-0014*	4" Rubber Basecove W Adhesive - MPR Seating Area Wall-E	Gray Non-Fibrous Homogeneous		100% Non-fibrous (other)	**None Detected**
14-Adhesive *121200561-0014A*	4" Rubber Basecove W Adhesive - MPR Seating Area Wall-E	Beige Non-Fibrous Homogeneous		100% Non-fibrous (other)	**None Detected**
15-Basecove *121200561-0015*	4" Rubber Basecove W Adhesive - MPR Seating Area Wall-West	Gray Non-Fibrous Homogeneous		100% Non-fibrous (other)	**None Detected**

Analyst(s)

Amanda Lang (18)
Carlos Rivadeneyra (13)

Michelle Wilson

Michelle Wilson, Laboratory Manager
or other approved signatory

EMSL maintains liability limited to cost of analysis. This report relates only to the samples reported and may not be reproduced, except in full, without written approval by EMSL. EMSL bears no responsibility for sample collection activities or analytical method limitations. Interpretation and use of test results are the responsibility of the client. This report must not be used by the client to claim product certification, approval, or endorsement by NVLAP, NIST or any agency of the federal government. Non-friable organically bound materials present a problem matrix and therefore EMSL recommends gravimetric reduction prior to analysis. Samples received in good condition unless otherwise noted. Estimated accuracy, precision and uncertainty data available upon request.
Samples analyzed by EMSL Analytical, Inc. Phoenix, AZ NVLAP Lab Code 200811-0, AZ0937

Initial report from 02/14/2012 09:13:17

EMSL Analytical, Inc.
3356 West Catalina Drive, Phoenix, AZ 85017
Phone/Fax: (602) 276-4344 / (602) 276-4053
www.emsl.com phoenixlab@emsl.com

EMSL Order:	121200561
CustomerID:	32BAIN21
CustomerPO:	
ProjectID:	

Attn: **Dan Maiha**
Bainbridge Environmental Consultants
2670 North Main Street
Suite 320
Santa Ana, CA 92705

Phone:	(714) 247-0024
Fax:	(714) 247-0025
Received:	02/13/12 10:00 AM
Analysis Date:	2/13/2012
Collected:	

Project: **Muir ES Building 2**

Test Report: Asbestos Analysis of Bulk Materials via EPA 600/R-93/116 and/or EPA 600/M4-82-020 Method(s) using Polarized Light Microscopy

			Non-Asbestos				Asbestos
Sample	**Description**	**Appearance**	**%**	**Fibrous**	**%**	**Non-Fibrous**	**% Type**
15-Adhesive *121200561-0015A*	4" Rubber Basecove W Adhesive - MPR Seating Area Wall-West	Beige Non-Fibrous Homogeneous			100%	Non-fibrous (other)	**None Detected**
16-Basecove *121200561-0016*	4" Rubber Basecove W Adhesive - MPR Stairway Wall-West	Gray Non-Fibrous Homogeneous			100%	Non-fibrous (other)	**None Detected**
16-Adhesive *121200561-0016A*	4" Rubber Basecove W Adhesive - MPR Stairway Wall-West	Beige Non-Fibrous Homogeneous			100%	Non-fibrous (other)	**None Detected**
17-Ceiling Tile *121200561-0017*	12" Ceiling Tile/White W Puck Mastic/Brown - MPR Ceiling-East	Gray Fibrous Homogeneous	95%	Min. Wool	5%	Non-fibrous (other)	**None Detected**
17-Mastic *121200561-0017A*	12" Ceiling Tile/White W Puck Mastic/Brown - MPR Ceiling-East	Tan Non-Fibrous Homogeneous			100%	Non-fibrous (other)	**None Detected**
18-Ceiling Tile *121200561-0018*	12" Ceiling Tile/White W Puck Mastic/Brown - MPR Ceiling-West	Gray Fibrous Homogeneous	95%	Min. Wool	5%	Non-fibrous (other)	**None Detected**

Analyst(s)

Amanda Lang (18)
Carlos Rivadeneyra (13)

Michelle Wilson

Michelle Wilson, Laboratory Manager
or other approved signatory

EMSL maintains liability limited to cost of analysis. This report relates only to the samples reported and may not be reproduced, except in full, without written approval by EMSL. EMSL bears no responsibility for sample collection activities or analytical method limitations. Interpretation and use of test results are the responsibility of the client. This report must not be used by the client to claim product certification, approval, or endorsement by NVLAP, NIST or any agency of the federal government. Non-friable organically bound materials present a problem matrix and therefore EMSL recommends gravimetric reduction prior to analysis. Samples received in good condition unless otherwise noted. Estimated accuracy, precision and uncertainty data available upon request.
Samples analyzed by EMSL Analytical, Inc. Phoenix, AZ NVLAP Lab Code 200811-0, AZ0937

Initial report from 02/14/2012 09:13:17

EMSL Analytical, Inc.
3356 West Catalina Drive, Phoenix, AZ 85017
Phone/Fax: (602) 276-4344 / (602) 276-4053
www.emsl.com phoenixlab@emsl.com

EMSL Order:	121200561
CustomerID:	32BAIN21
CustomerPO:	
ProjectID:	

Attn: **Dan Maiha**
Bainbridge Environmental Consultants
2670 North Main Street
Suite 320
Santa Ana, CA 92705

Phone:	(714) 247-0024
Fax:	(714) 247-0025
Received:	02/13/12 10:00 AM
Analysis Date:	2/13/2012
Collected:	

Project: **Muir ES Building 2**

Test Report: Asbestos Analysis of Bulk Materials via EPA 600/R-93/116 and/or EPA 600/M4-82-020 Method(s) using Polarized Light Microscopy

Sample	Description	Appearance	Non-Asbestos % Fibrous	Non-Asbestos % Non-Fibrous	Asbestos % Type
18-Mastic *121200561-0018A*	12" Ceiling Tile/White W Puck Mastic/Brown - MPR Ceiling-West	Tan Non-Fibrous Homogeneous		100% Non-fibrous (other)	**None Detected**
19-Ceiling Tile *121200561-0019*	12" Ceiling Tile/White W Puck Mastic/Brown - MPR Ceiling-North	Gray Fibrous Homogeneous	95% Min. Wool	5% Non-fibrous (other)	**None Detected**
19-Mastic *121200561-0019A*	12" Ceiling Tile/White W Puck Mastic/Brown - MPR Ceiling-North	Tan Non-Fibrous Homogeneous		100% Non-fibrous (other)	**None Detected**
20-Joint Compound *121200561-0020*	Drywall W Joint Compound - Custodain Room Wall	White Non-Fibrous Homogeneous	No Drywall present.	100% Non-fibrous (other)	**None Detected**
21-Joint Compound *121200561-0021*	Drywall W Joint Compound - Stage Wall-North	White Non-Fibrous Homogeneous	No Drywall present.	100% Non-fibrous (other)	**None Detected**
22-Drywall *121200561-0022*	Drywall W Joint Compound - Stage Stairway Wall	White Non-Fibrous Homogeneous	3% Cellulose 2% Glass	5% Non-fibrous (other) 90% Gypsum	**None Detected**

Analyst(s)

Amanda Lang (18)
Carlos Rivadeneyra (13)

Michelle Wilson

Michelle Wilson, Laboratory Manager
or other approved signatory

EMSL maintains liability limited to cost of analysis. This report relates only to the samples reported and may not be reproduced, except in full, without written approval by EMSL. EMSL bears no responsibility for sample collection activities or analytical method limitations. Interpretation and use of test results are the responsibility of the client. This report must not be used by the client to claim product certification, approval, or endorsement by NVLAP, NIST or any agency of the federal government. Non-friable organically bound materials present a problem matrix and therefore EMSL recommends gravimetric reduction prior to analysis. Samples received in good condition unless otherwise noted. Estimated accuracy, precision and uncertainty data available upon request.
Samples analyzed by EMSL Analytical, Inc. Phoenix, AZ NVLAP Lab Code 200811-0, AZ0937

Initial report from 02/14/2012 09:13:17

EMSL Analytical, Inc.
3356 West Catalina Drive, Phoenix, AZ 85017
Phone/Fax: (602) 276-4344 / (602) 276-4053
www.emsl.com phoenixlab@emsl.com

EMSL Order:	121200561
CustomerID:	32BAIN21
CustomerPO:	
ProjectID:	

Attn: **Dan Maiha**
Bainbridge Environmental Consultants
2670 North Main Street
Suite 320
Santa Ana, CA 92705

Phone:	(714) 247-0024
Fax:	(714) 247-0025
Received:	02/13/12 10:00 AM
Analysis Date:	2/13/2012
Collected:	

Project: **Muir ES Building 2**

Test Report: Asbestos Analysis of Bulk Materials via EPA 600/R-93/116 and/or EPA 600/M4-82-020 Method(s) using Polarized Light Microscopy

			Non-Asbestos		Asbestos
Sample	**Description**	**Appearance**	**% Fibrous**	**% Non-Fibrous**	**% Type**
22-Joint Compound *121200561-0022A*	Drywall W Joint Compound - Stage Stairway Wall	White Non-Fibrous Homogeneous		100% Non-fibrous (other)	**None Detected**

Analyst(s)

Amanda Lang (18)
Carlos Rivadeneyra (13)

Michelle Wilson

Michelle Wilson, Laboratory Manager
or other approved signatory

EMSL maintains liability limited to cost of analysis. This report relates only to the samples reported and may not be reproduced, except in full, without written approval by EMSL. EMSL bears no responsibility for sample collection activities or analytical method limitations. Interpretation and use of test results are the responsibility of the client. This report must not be used by the client to claim product certification, approval, or endorsement by NVLAP, NIST or any agency of the federal government. Non-friable organically bound materials present a problem matrix and therefore EMSL recommends gravimetric reduction prior to analysis. Samples received in good condition unless otherwise noted. Estimated accuracy, precision and uncertainty data available upon request.
Samples analyzed by EMSL Analytical, Inc. Phoenix, AZ NVLAP Lab Code 200811-0, AZ0937

Initial report from 02/14/2012 09:13:17

THIS IS THE LAST PAGE OF THE REPORT.

ASBESTOS BULK SAMPLE

Client: SAUSD
Project Name: Muir ES Building 3
Address: 1951 Mabury Street
Santa Ana, CA 92705

BEC Project Number: 12014043.10
Inspector/Sampler: D. Mai Ha/K. Cisco
Date Sampled: 2/8/2012

BAINBRIDGE
Environmental Consultants

Sample Number	Building	Sample Location	Sample Description/Color	Material Location	Approx. Quantity	Results
1	Building 3	Exterior Wall-North	Stucco/Beige	Exterior Walls Throughout	-	None Detected
2	Building 3	Exterior Wall-Northeast	Stucco/Beige		-	None Detected
3	Building 3	Exterior Wall-East	Stucco/Beige		-	None Detected
4	Building 3	Exterior Wall-South	Stucco/Beige		-	None Detected
5	Building 3	Exterior Wall-Southwest	Stucco/Beige		-	None Detected
6	Building 3	Exterior Wall-West	Stucco/Beige		-	None Detected
7	Building 3	Exterior Wall-West	Stucco/Beige		-	None Detected
8	Building 3	Classroom 105 Wall	4" Rubber Basecove w Adhesive/Gray	Basecoves Throughout	-	None Detected
9	Building 3	Classroom 104 Wall	4" Rubber Basecove w Adhesive/Gray		-	None Detected
10	Building 3	Classroom 105 Wall	4" Rubber Basecove w Adhesive/Gray		-	None Detected
11	Building 3	Mech. Room Wall	Drywall w Joint Compound	Walls & Ceilings Throughout	-	None Detected
12	Building 3	Classroom 105 Wall Above Drop Ceiling	Drywall w Joint Compound		-	None Detected
13	Building 3	Food Service Wall	Drywall w Joint Compound		-	None Detected
14	Building 3	Classroom 104 Ceiling	2' x 4' Ceiling Panel/White	Classroom Drop Ceilings Throughout	-	None Detected

2670 North Main Street, Suite 320
Santa Ana, CA 92705

(714) 247-0024
Fax (714) 247-0025

ASBESTOS BULK SAMPLE

SAUSD – Muir Elementary School

BAINBRIDGE
Environmental Consultants

Sample Number	Building	Sample Location	Sample Description/Color	Material Location	Approx. Quantity	Results
15	Building 3	Classroom 105 Ceiling	2' x 4' Ceiling Panel/White	Classroom Drop Ceilings Throughout	-	None Detected
16	Building 3	Teachers Room Ceiling	2' x 4' Ceiling Panel/White		-	None Detected
17	Building 3	Classroom 105 Entryway Floor	12-inch Floor Tile w Mastic/Gray	12-inch Floor Tiles Throughout	-	None Detected
18	Building 3	Classroom 104 Entryway Floor	12-inch Floor Tile w Mastic/Gray		-	None Detected
19	Building 3	Classroom 105 Entryway Floor	12-inch Floor Tile w Mastic/Gray		-	None Detected
20	Building 3	Speed Line Ceiling	2' x 4' Ceiling Panel/White	Speed Line & Food Serv. Ceilings Only	-	None Detected
21	Building 3	Food Serv. Ceiling	2' x 4' Ceiling Panel/White		-	None Detected
22	Building 3	Food Serv. Ceiling	2' x 4' Ceiling Panel/White		-	None Detected
23	Building 3	Play St. Walls	Plaster/Gray	Play St. Walls & Ceilings	-	None Detected
24	Building 3	Play St. Walls	Plaster/Gray		-	None Detected
25	Building 3	Play St. Walls	Plaster/Gray		-	None Detected
26	Building 3	Rooftop at Shingle	Masonry/Cementious Shingle	Throughout School	-	None Detected
--	Building 3	Inaccessible	Fire Doors	Throughout Building	--	Assumed

2670 North Main Street, Suite 320
Santa Ana, CA 92705

(714) 247-0024
Fax (714) 247-0025

EMSL Analytical, Inc.
3356 West Catalina Drive, Phoenix, AZ 85017
Phone/Fax: (602) 276-4344 / (602) 276-4053
www.emsl.com phoenixlab@emsl.com

EMSL Order:	121200560
CustomerID:	32BAIN21
CustomerPO:	
ProjectID:	

Attn: **Dan Maiha**
Bainbridge Environmental Consultants
2670 North Main Street
Suite 320
Santa Ana, CA 92705

Phone:	(714) 247-0024
Fax:	(714) 247-0025
Received:	02/13/12 10:00 AM
Analysis Date:	2/14/2012
Collected:	

Project: **Muir ES Building 3**

Test Report: Asbestos Analysis of Bulk Materials via EPA 600/R-93/116 and/or EPA 600/M4-82-020 Method(s) using Polarized Light Microscopy

Sample	Description	Appearance	Non-Asbestos % Fibrous	Non-Asbestos % Non-Fibrous	Asbestos % Type
1 *121200560-0001*	Stucco/Beige - Exterior Wall-North	Gray Non-Fibrous Homogeneous		100% Non-fibrous (other)	**None Detected**
2 *121200560-0002*	Stucco/Beige - Exterior Wall-Northeast	Gray Non-Fibrous Heterogeneous		100% Non-fibrous (other)	**None Detected**
3 *121200560-0003*	Stucco/Beige - Exterior Wall-East	Gray/Beige Non-Fibrous Heterogeneous		100% Non-fibrous (other)	**None Detected**
4-Skim Coat *121200560-0004*	Stucco/Beige - Exterior Wall-South	Beige Non-Fibrous Homogeneous		100% Non-fibrous (other)	**None Detected**
4-Base Coat *121200560-0004A*	Stucco/Beige - Exterior Wall-South	Gray Non-Fibrous Homogeneous		100% Non-fibrous (other)	**None Detected**
5-Skim Coat *121200560-0005*	Stucco/Beige - Exterior Wall-Southwest	Beige Non-Fibrous Homogeneous		100% Non-fibrous (other)	**None Detected**
5-Base Coat *121200560-0005A*	Stucco/Beige - Exterior Wall-Southwest	Gray Non-Fibrous Homogeneous		100% Non-fibrous (other)	**None Detected**

Analyst(s)

Amanda Lang (24)
Carlos Rivadeneyra (14)

Michelle Wilson

Michelle Wilson, Laboratory Manager
or other approved signatory

EMSL maintains liability limited to cost of analysis. This report relates only to the samples reported and may not be reproduced, except in full, without written approval by EMSL. EMSL bears no responsibility for sample collection activities or analytical method limitations. Interpretation and use of test results are the responsibility of the client. This report must not be used by the client to claim product certification, approval, or endorsement by NVLAP, NIST or any agency of the federal government. Non-friable organically bound materials present a problem matrix and therefore EMSL recommends gravimetric reduction prior to analysis. Samples received in good condition unless otherwise noted. Estimated accuracy, precision and uncertainty data available upon request.
Samples analyzed by EMSL Analytical, Inc. Phoenix, AZ NVLAP Lab Code 200811-0, AZ0937

Initial report from 02/14/2012 09:43:04

EMSL Analytical, Inc.
3356 West Catalina Drive, Phoenix, AZ 85017
Phone/Fax: (602) 276-4344 / (602) 276-4053
www.emsl.com phoenixlab@emsl.com

EMSL Order:	121200560
CustomerID:	32BAIN21
CustomerPO:	
ProjectID:	

Attn: **Dan Maiha**
Bainbridge Environmental Consultants
2670 North Main Street
Suite 320
Santa Ana, CA 92705

Phone:	(714) 247-0024
Fax:	(714) 247-0025
Received:	02/13/12 10:00 AM
Analysis Date:	2/14/2012
Collected:	

Project: **Muir ES Building 3**

Test Report: Asbestos Analysis of Bulk Materials via EPA 600/R-93/116 and/or EPA 600/M4-82-020 Method(s) using Polarized Light Microscopy

Sample	Description	Appearance	Non-Asbestos % Fibrous	Non-Asbestos % Non-Fibrous	Asbestos % Type
6 *121200560-0006*	Stucco/Beige - Exterior Wall-West	Gray Non-Fibrous Homogeneous		100% Non-fibrous (other)	**None Detected**
7-Skim Coat *121200560-0007*	Stucco/Beige - Exterior Wall-West	Beige Non-Fibrous Homogeneous		100% Non-fibrous (other)	**None Detected**
7-Base Coat *121200560-0007A*	Stucco/Beige - Exterior Wall-West	Gray Non-Fibrous Homogeneous		100% Non-fibrous (other)	**None Detected**
8-Basecove *121200560-0008*	4" Rubber Basecove W Adhesive/Gray - Classroom 105 Wall	Gray Non-Fibrous Homogeneous		100% Non-fibrous (other)	**None Detected**
8-Adhesive *121200560-0008A*	4" Rubber Basecove W Adhesive/Gray - Classroom 105 Wall	Beige Non-Fibrous Homogeneous		100% Non-fibrous (other)	**None Detected**
9-Basecove *121200560-0009*	4" Rubber Basecove W Adhesive/Gray - Classroom 104 Wall	Gray Non-Fibrous Homogeneous		100% Non-fibrous (other)	**None Detected**

Analyst(s)

Amanda Lang (24)
Carlos Rivadeneyra (14)

Michelle Wilson

Michelle Wilson, Laboratory Manager
or other approved signatory

EMSL maintains liability limited to cost of analysis. This report relates only to the samples reported and may not be reproduced, except in full, without written approval by EMSL. EMSL bears no responsibility for sample collection activities or analytical method limitations. Interpretation and use of test results are the responsibility of the client. This report must not be used by the client to claim product certification, approval, or endorsement by NVLAP, NIST or any agency of the federal government. Non-friable organically bound materials present a problem matrix and therefore EMSL recommends gravimetric reduction prior to analysis. Samples received in good condition unless otherwise noted. Estimated accuracy, precision and uncertainty data available upon request.
Samples analyzed by EMSL Analytical, Inc. Phoenix, AZ NVLAP Lab Code 200811-0, AZ0937

Initial report from 02/14/2012 09:43:04

EMSL Analytical, Inc.
3356 West Catalina Drive, Phoenix, AZ 85017
Phone/Fax: (602) 276-4344 / (602) 276-4053
www.emsl.com phoenixlab@emsl.com

EMSL Order:	121200560
CustomerID:	32BAIN21
CustomerPO:	
ProjectID:	

Attn: **Dan Maiha**
Bainbridge Environmental Consultants
2670 North Main Street
Suite 320
Santa Ana, CA 92705

Phone:	(714) 247-0024
Fax:	(714) 247-0025
Received:	02/13/12 10:00 AM
Analysis Date:	2/14/2012
Collected:	

Project: **Muir ES Building 3**

Test Report: Asbestos Analysis of Bulk Materials via EPA 600/R-93/116 and/or EPA 600/M4-82-020 Method(s) using Polarized Light Microscopy

Sample	Description	Appearance	Non-Asbestos %	Fibrous	Non-Asbestos %	Non-Fibrous	Asbestos % Type
9-Adhesive *121200560-0009A*	4" Rubber Basecove W Adhesive/Gray - Classroom 104 Wall	Beige Non-Fibrous Homogeneous			100%	Non-fibrous (other)	**None Detected**
10-Basecove *121200560-0010*	4" Rubber Basecove W Adhesive/Gray - Classroom 105 Wall	Gray Non-Fibrous Homogeneous			100%	Non-fibrous (other)	**None Detected**
10-Adhesive *121200560-0010A*	4" Rubber Basecove W Adhesive/Gray - Classroom 105 Wall	Beige Non-Fibrous Homogeneous			100%	Non-fibrous (other)	**None Detected**
11-Drywall *121200560-0011*	Drywall W Joint Compound - Mech. Room Wall	Brown/White Fibrous Heterogeneous	10% 2%	Cellulose Glass	3% 85%	Non-fibrous (other) Gypsum	**None Detected**
11-Joint Compound *121200560-0011A*	Drywall W Joint Compound - Mech. Room Wall	White Non-Fibrous Homogeneous			100%	Non-fibrous (other)	**None Detected**
12-Drywall *121200560-0012*	Drywall W Joint Compound - Classroom 105 Wall Above Drop Ceiling	Brown/White Fibrous Heterogeneous	10% 2%	Cellulose Glass	3% 85%	Non-fibrous (other) Gypsum	**None Detected**

Analyst(s)

Amanda Lang (24)
Carlos Rivadeneyra (14)

Michelle Wilson

Michelle Wilson, Laboratory Manager
or other approved signatory

EMSL maintains liability limited to cost of analysis. This report relates only to the samples reported and may not be reproduced, except in full, without written approval by EMSL. EMSL bears no responsibility for sample collection activities or analytical method limitations. Interpretation and use of test results are the responsibility of the client. This report must not be used by the client to claim product certification, approval, or endorsement by NVLAP, NIST or any agency of the federal government. Non-friable organically bound materials present a problem matrix and therefore EMSL recommends gravimetric reduction prior to analysis. Samples received in good condition unless otherwise noted. Estimated accuracy, precision and uncertainty data available upon request.
Samples analyzed by EMSL Analytical, Inc. Phoenix, AZ NVLAP Lab Code 200811-0, AZ0937

Initial report from 02/14/2012 09:43:04

EMSL Analytical, Inc.
3356 West Catalina Drive, Phoenix, AZ 85017
Phone/Fax: (602) 276-4344 / (602) 276-4053
www.emsl.com phoenixlab@emsl.com

EMSL Order:	121200560
CustomerID:	32BAIN21
CustomerPO:	
ProjectID:	

Attn: **Dan Maiha**
Bainbridge Environmental Consultants
2670 North Main Street
Suite 320
Santa Ana, CA 92705

Phone:	(714) 247-0024
Fax:	(714) 247-0025
Received:	02/13/12 10:00 AM
Analysis Date:	2/14/2012
Collected:	

Project: **Muir ES Building 3**

Test Report: Asbestos Analysis of Bulk Materials via EPA 600/R-93/116 and/or EPA 600/M4-82-020 Method(s) using Polarized Light Microscopy

Sample	Description	Appearance	Non-Asbestos %	Fibrous	Non-Asbestos %	Non-Fibrous	Asbestos % Type
12-Joint Compound *121200560-0012A*	Drywall W Joint Compound - Classroom 105 Wall Above Drop Ceiling	White Non-Fibrous Homogeneous			100%	Non-fibrous (other)	**None Detected**
13-Drywall *121200560-0013*	Drywall W Joint Compound - Food Service Wall	Brown/White Fibrous Heterogeneous	10% 2%	Cellulose Glass	3% 85%	Non-fibrous (other) Gypsum	**None Detected**
13-Joint Compound *121200560-0013A*	Drywall W Joint Compound - Food Service Wall	White Non-Fibrous Homogeneous			100%	Non-fibrous (other)	**None Detected**
14 *121200560-0014*	2'x4' Ceiling Panel/White - Classroom 104 Ceiling	Gray Fibrous Homogeneous	95%	Min. Wool	5%	Non-fibrous (other)	**None Detected**
15 *121200560-0015*	2'x4' Ceiling Panel/White - Classroom 105 Ceiling	Gray Fibrous Homogeneous	95%	Min. Wool	5%	Non-fibrous (other)	**None Detected**
16 *121200560-0016*	2'x4' Ceiling Panel/White - Teachers Room Ceiling	Gray Fibrous Homogeneous	95%	Min. Wool	5%	Non-fibrous (other)	**None Detected**

Analyst(s)

Amanda Lang (24)
Carlos Rivadeneyra (14)

Michelle Wilson

Michelle Wilson, Laboratory Manager
or other approved signatory

EMSL maintains liability limited to cost of analysis. This report relates only to the samples reported and may not be reproduced, except in full, without written approval by EMSL. EMSL bears no responsibility for sample collection activities or analytical method limitations. Interpretation and use of test results are the responsibility of the client. This report must not be used by the client to claim product certification, approval, or endorsement by NVLAP, NIST or any agency of the federal government. Non-friable organically bound materials present a problem matrix and therefore EMSL recommends gravimetric reduction prior to analysis. Samples received in good condition unless otherwise noted. Estimated accuracy, precision and uncertainty data available upon request.
Samples analyzed by EMSL Analytical, Inc. Phoenix, AZ NVLAP Lab Code 200811-0, AZ0937

Initial report from 02/14/2012 09:43:04

EMSL Analytical, Inc.
3356 West Catalina Drive, Phoenix, AZ 85017
Phone/Fax: (602) 276-4344 / (602) 276-4053
www.emsl.com phoenixlab@emsl.com

EMSL Order:	121200560
CustomerID:	32BAIN21
CustomerPO:	
ProjectID:	

Attn: **Dan Maiha**
Bainbridge Environmental Consultants
2670 North Main Street
Suite 320
Santa Ana, CA 92705

Phone:	(714) 247-0024
Fax:	(714) 247-0025
Received:	02/13/12 10:00 AM
Analysis Date:	2/14/2012
Collected:	

Project: **Muir ES Building 3**

Test Report: Asbestos Analysis of Bulk Materials via EPA 600/R-93/116 and/or EPA 600/M4-82-020 Method(s) using Polarized Light Microscopy

			Non-Asbestos		Asbestos
Sample	**Description**	**Appearance**	**% Fibrous**	**% Non-Fibrous**	**% Type**
17-Floor Tile *121200560-0017*	12-Inch Floor Tile W Mastic/Gray - Classroom 105 Entryway Floor	Gray Non-Fibrous Homogeneous		100% Non-fibrous (other)	**None Detected**
17-Mastic *121200560-0017A*	12-Inch Floor Tile W Mastic/Gray - Classroom 105 Entryway Floor	Tan/Clear Non-Fibrous Heterogeneous		100% Non-fibrous (other)	**None Detected**
18-Floor Tile *121200560-0018*	12-Inch Floor Tile W Mastic/Gray - Classroom 104 Entryway Floor	Gray Non-Fibrous Homogeneous		100% Non-fibrous (other)	**None Detected**
18-Mastic *121200560-0018A*	12-Inch Floor Tile W Mastic/Gray - Classroom 104 Entryway Floor	Tan Non-Fibrous Homogeneous		100% Non-fibrous (other)	**None Detected**
19-Floor Tile *121200560-0019*	12-Inch Floor Tile W Mastic/Gray - Classroom 105 Entryway Floor	Gray Non-Fibrous Homogeneous		100% Non-fibrous (other)	**None Detected**
19-Mastic *121200560-0019A*	12-Inch Floor Tile W Mastic/Gray - Classroom 105 Entryway Floor	Tan/Clear Non-Fibrous Heterogeneous		100% Non-fibrous (other)	**None Detected**

Analyst(s)

Amanda Lang (24)
Carlos Rivadeneyra (14)

Michelle Wilson

Michelle Wilson, Laboratory Manager
or other approved signatory

EMSL maintains liability limited to cost of analysis. This report relates only to the samples reported and may not be reproduced, except in full, without written approval by EMSL. EMSL bears no responsibility for sample collection activities or analytical method limitations. Interpretation and use of test results are the responsibility of the client. This report must not be used by the client to claim product certification, approval, or endorsement by NVLAP, NIST or any agency of the federal government. Non-friable organically bound materials present a problem matrix and therefore EMSL recommends gravimetric reduction prior to analysis. Samples received in good condition unless otherwise noted. Estimated accuracy, precision and uncertainty data available upon request.
Samples analyzed by EMSL Analytical, Inc. Phoenix, AZ NVLAP Lab Code 200811-0, AZ0937

Initial report from 02/14/2012 09:43:04

EMSL Analytical, Inc.
3356 West Catalina Drive, Phoenix, AZ 85017
Phone/Fax: (602) 276-4344 / (602) 276-4053
www.emsl.com phoenixlab@emsl.com

EMSL Order:	121200560
CustomerID:	32BAIN21
CustomerPO:	
ProjectID:	

Attn: **Dan Maiha**
Bainbridge Environmental Consultants
2670 North Main Street
Suite 320
Santa Ana, CA 92705

Phone:	(714) 247-0024
Fax:	(714) 247-0025
Received:	02/13/12 10:00 AM
Analysis Date:	2/14/2012
Collected:	

Project: **Muir ES Building 3**

Test Report: Asbestos Analysis of Bulk Materials via EPA 600/R-93/116 and/or EPA 600/M4-82-020 Method(s) using Polarized Light Microscopy

Sample	Description	Appearance	Non-Asbestos %	Fibrous	Non-Asbestos %	Non-Fibrous	Asbestos % Type
20 *121200560-0020*	2'x4' Ceiling Panel/White - Speed Line Ceiling	Gray Fibrous Homogeneous	60% 20%	Min. Wool Cellulose	10% 10%	Non-fibrous (other) Perlite	**None Detected**
21 *121200560-0021*	2'x4' Ceiling Panel/White - Food Serv. Ceiling	Gray Fibrous Homogeneous	60% 20%	Min. Wool Cellulose	10% 10%	Non-fibrous (other) Perlite	**None Detected**
22 *121200560-0022*	2'x4' Ceiling Panel/White - Food Serv. Ceiling	Gray Fibrous Homogeneous	60% 20%	Min. Wool Cellulose	10% 10%	Non-fibrous (other) Perlite	**None Detected**
23 *121200560-0023*	Plaster/Gray - Play St. Walls	Gray/White Non-Fibrous Heterogeneous	<1%	Glass	100%	Non-fibrous (other)	**None Detected**
24 *121200560-0024*	Plaster/Gray - Play St. Walls	Gray/White Non-Fibrous Heterogeneous	<1%	Glass	100%	Non-fibrous (other)	**None Detected**
25 *121200560-0025*	Plaster/Gray - Play St. Walls	Gray/White Non-Fibrous Heterogeneous	<1%	Glass	100%	Non-fibrous (other)	**None Detected**
26 *121200560-0026*	Masonry/Cementious Shingle - Rooftop At Shingle	Gray Non-Fibrous Homogeneous			100%	Non-fibrous (other)	**None Detected**

Analyst(s)

Amanda Lang (24)
Carlos Rivadeneyra (14)

Michelle Wilson

Michelle Wilson, Laboratory Manager
or other approved signatory

EMSL maintains liability limited to cost of analysis. This report relates only to the samples reported and may not be reproduced, except in full, without written approval by EMSL. EMSL bears no responsibility for sample collection activities or analytical method limitations. Interpretation and use of test results are the responsibility of the client. This report must not be used by the client to claim product certification, approval, or endorsement by NVLAP, NIST or any agency of the federal government. Non-friable organically bound materials present a problem matrix and therefore EMSL recommends gravimetric reduction prior to analysis. Samples received in good condition unless otherwise noted. Estimated accuracy, precision and uncertainty data available upon request.
Samples analyzed by EMSL Analytical, Inc. Phoenix, AZ NVLAP Lab Code 200811-0, AZ0937

Initial report from 02/14/2012 09:43:04

THIS IS THE LAST PAGE OF THE REPORT.

ASBESTOS BULK SAMPLE

Client: SAUSD
Project Name: Muir ES Building 4
Address: 1951 Mabury Street
Santa Ana, CA 92705

BEC Project Number: 12014043.10
Inspector/Sampler: D. Mai Ha/K. Cisco
Date Sampled: 2/8/2012

BAINBRIDGE
Environmental Consultants

Sample Number	Building	Sample Location	Sample Description/Color	Material Location	Approx. Quantity	Results
1	Building 4	Exterior Wall-North	Stucco/Beige	Exterior Walls Throughout	-	None Detected
2	Building 4	Exterior Wall-Northeast	Stucco/Beige		-	None Detected
3	Building 4	Exterior Wall-East	Stucco/Beige		-	None Detected
4	Building 4	Exterior Wall-South	Stucco/Beige		-	None Detected
5	Building 4	Exterior Wall-Southwest	Stucco/Beige		-	None Detected
6	Building 4	Exterior Wall-West	Stucco/Beige		-	None Detected
7	Building 4	Exterior Wall-West	Stucco/Beige		-	None Detected
8	Building 4	Special Ed./Rm. 101 Wall	4" Rubber Basecove w Adhesive/Gray	Basecoves Throughout	-	None Detected
9	Building 4	Special Ed./Rm. 102 Wall	4" Rubber Basecove w Adhesive/Gray		-	None Detected
10	Building 4	Special Ed./Rom 103 Wall	4" Rubber Basecove w Adhesive/Gray		-	None Detected
11	Building 4	Special Ed./Rm. 101 Wall	Drywall w Joint Compound	Walls & Ceilings Throughout	-	None Detected
12	Building 4	Special Ed./Rm. 102 Wall	Drywall w Joint Compound		-	None Detected
13	Building 4	Special Ed./Rom 103 Wall	Drywall w Joint Compound		-	None Detected
14	Building 4	Special Ed./Rom 103 Ceiling	2' x 4' Ceiling Panel/White	Classroom Drop Ceilings Throughout	-	None Detected
15	Building 4	Special Ed./Rm. 102 Ceiling	2' x 4' Ceiling Panel/White		-	None Detected

2670 North Main Street, Suite 320
Santa Ana, CA 92705

(714) 247-0024
Fax (714) 247-0025

ASBESTOS BULK SAMPLE

SAUSD – Muir Elementary School

BAINBRIDGE
Environmental Consultants

Sample Number	Building	Sample Location	Sample Description/Color	Material Location	Approx. Quantity	Results
16	Building 4	Special Ed./Rm. 101 Ceiling	2' x 4' Ceiling Panel/White	Classroom Drop Ceilings Throughout	-	None Detected
17	Building 4	Special Ed./Rm. 101 Entryway Floor	12-inch Floor Tile w Mastic/Gray	12-inch Floor Tiles Throughout	-	None Detected
18	Building 4	Special Ed./Rm. 102 Entryway Floor	12-inch Floor Tile w Mastic/Gray		-	None Detected
19	Building 4	Special Ed./Rom 103 Entryway Floor	12-inch Floor Tile w Mastic/Gray		-	None Detected
--	Building 4	Inaccessible	Fire Doors	Throughout Building	--	Assumed

2670 North Main Street, Suite 320
Santa Ana, CA 92705

(714) 247-0024
Fax (714) 247-0025

EMSL Analytical, Inc.
3356 West Catalina Drive, Phoenix, AZ 85017
Phone/Fax: (602) 276-4344 / (602) 276-4053
www.emsl.com phoenixlab@emsl.com

EMSL Order:	121200562
CustomerID:	32BAIN21
CustomerPO:	
ProjectID:	

Attn: **Dan Maiha**
Bainbridge Environmental Consultants
2670 North Main Street
Suite 320
Santa Ana, CA 92705

Phone:	(714) 247-0024
Fax:	(714) 247-0025
Received:	02/13/12 10:00 AM
Analysis Date:	2/13/2012
Collected:	

Project: **Muir ES Building 4**

Test Report: Asbestos Analysis of Bulk Materials via EPA 600/R-93/116 and/or EPA 600/M4-82-020 Method(s) using Polarized Light Microscopy

Sample	Description	Appearance	Non-Asbestos % Fibrous	Non-Asbestos % Non-Fibrous	Asbestos % Type
1-Skim Coat *121200562-0001*	Stucco/Beige - Exterior Wall-North	Beige Non-Fibrous Homogeneous		100% Non-fibrous (other)	**None Detected**
1-Base Coat *121200562-0001A*	Stucco/Beige - Exterior Wall-North	Gray Non-Fibrous Heterogeneous		100% Non-fibrous (other)	**None Detected**
2-Skim Coat *121200562-0002*	Stucco/Beige - Exterior Wall-Northeast	Beige Non-Fibrous Homogeneous		100% Non-fibrous (other)	**None Detected**
2-Base Coat *121200562-0002A*	Stucco/Beige - Exterior Wall-Northeast	Gray Non-Fibrous Heterogeneous		100% Non-fibrous (other)	**None Detected**
3-Skim Coat *121200562-0003*	Stucco/Beige - Exterior Wall-East	Beige Non-Fibrous Homogeneous		100% Non-fibrous (other)	**None Detected**
3-Base Coat *121200562-0003A*	Stucco/Beige - Exterior Wall-East	Gray Non-Fibrous Heterogeneous		100% Non-fibrous (other)	**None Detected**
4-Skim Coat *121200562-0004*	Stucco/Beige - Exterior Wall-South	Beige Non-Fibrous Homogeneous		100% Non-fibrous (other)	**None Detected**

Analyst(s)

Carlos Rivadeneyra (11)
Mike J. Williams (25)

Michelle Wilson

Michelle Wilson, Laboratory Manager
or other approved signatory

EMSL maintains liability limited to cost of analysis. This report relates only to the samples reported and may not be reproduced, except in full, without written approval by EMSL. EMSL bears no responsibility for sample collection activities or analytical method limitations. Interpretation and use of test results are the responsibility of the client. This report must not be used by the client to claim product certification, approval, or endorsement by NVLAP, NIST or any agency of the federal government. Non-friable organically bound materials present a problem matrix and therefore EMSL recommends gravimetric reduction prior to analysis. Samples received in good condition unless otherwise noted. Estimated accuracy, precision and uncertainty data available upon request.
Samples analyzed by EMSL Analytical, Inc. Phoenix, AZ NVLAP Lab Code 200811-0, AZ0937

Initial report from 02/13/2012 16:39:09

EMSL Analytical, Inc.
3356 West Catalina Drive, Phoenix, AZ 85017
Phone/Fax: (602) 276-4344 / (602) 276-4053
www.emsl.com phoenixlab@emsl.com

EMSL Order:	121200562
CustomerID:	32BAIN21
CustomerPO:	
ProjectID:	

Attn: **Dan Maiha**
Bainbridge Environmental Consultants
2670 North Main Street
Suite 320
Santa Ana, CA 92705

Phone:	(714) 247-0024
Fax:	(714) 247-0025
Received:	02/13/12 10:00 AM
Analysis Date:	2/13/2012
Collected:	

Project: **Muir ES Building 4**

Test Report: Asbestos Analysis of Bulk Materials via EPA 600/R-93/116 and/or EPA 600/M4-82-020 Method(s) using Polarized Light Microscopy

			Non-Asbestos		Asbestos
Sample	**Description**	**Appearance**	**% Fibrous**	**% Non-Fibrous**	**% Type**
4-Base Coat *121200562-0004A*	Stucco/Beige - Exterior Wall-South	Gray Non-Fibrous Heterogeneous		100% Non-fibrous (other)	**None Detected**
5-Skim Coat *121200562-0005*	Stucco/Beige - Exterior Wall-Southwest	Beige Non-Fibrous Homogeneous		100% Non-fibrous (other)	**None Detected**
5-Base Coat *121200562-0005A*	Stucco/Beige - Exterior Wall-Southwest	Gray Non-Fibrous Heterogeneous		100% Non-fibrous (other)	**None Detected**
6-Skim Coat *121200562-0006*	Stucco/Beige - Exterior Wall-West	Beige Non-Fibrous Homogeneous		100% Non-fibrous (other)	**None Detected**
6-Base Coat *121200562-0006A*	Stucco/Beige - Exterior Wall-West	Gray Non-Fibrous Homogeneous		100% Non-fibrous (other)	**None Detected**
7-Skim Coat *121200562-0007*	Stucco/Beige - Exterior Wall-West	Beige Non-Fibrous Homogeneous		100% Non-fibrous (other)	**None Detected**
7-Base Coat *121200562-0007A*	Stucco/Beige - Exterior Wall-West	Gray Non-Fibrous Homogeneous		100% Non-fibrous (other)	**None Detected**

Analyst(s)

Carlos Rivadeneyra (11)
Mike J. Williams (25)

Michelle Wilson

Michelle Wilson, Laboratory Manager
or other approved signatory

EMSL maintains liability limited to cost of analysis. This report relates only to the samples reported and may not be reproduced, except in full, without written approval by EMSL. EMSL bears no responsibility for sample collection activities or analytical method limitations. Interpretation and use of test results are the responsibility of the client. This report must not be used by the client to claim product certification, approval, or endorsement by NVLAP, NIST or any agency of the federal government. Non-friable organically bound materials present a problem matrix and therefore EMSL recommends gravimetric reduction prior to analysis. Samples received in good condition unless otherwise noted. Estimated accuracy, precision and uncertainty data available upon request.

Samples analyzed by EMSL Analytical, Inc. Phoenix, AZ NVLAP Lab Code 200811-0, AZ0937

Initial report from 02/13/2012 16:39:09

EMSL Analytical, Inc.
3356 West Catalina Drive, Phoenix, AZ 85017
Phone/Fax: (602) 276-4344 / (602) 276-4053
www.emsl.com phoenixlab@emsl.com

EMSL Order:	121200562
CustomerID:	32BAIN21
CustomerPO:	
ProjectID:	

Attn: **Dan Maiha**
Bainbridge Environmental Consultants
2670 North Main Street
Suite 320
Santa Ana, CA 92705

Phone:	(714) 247-0024
Fax:	(714) 247-0025
Received:	02/13/12 10:00 AM
Analysis Date:	2/13/2012
Collected:	

Project: **Muir ES Building 4**

Test Report: Asbestos Analysis of Bulk Materials via EPA 600/R-93/116 and/or EPA 600/M4-82-020 Method(s) using Polarized Light Microscopy

Sample	Description	Appearance	Non-Asbestos % Fibrous	Non-Asbestos % Non-Fibrous	Asbestos % Type
8-Basecove *121200562-0008*	4" Rubber Basecove W Adhesive/Gray - Special Ed./Rm. 101 Wall	Gray Non-Fibrous Homogeneous		100% Non-fibrous (other)	**None Detected**
			No Adhesive present.		
9-Basecove *121200562-0009*	4" Rubber Basecove W Adhesive/Gray - Special Ed./Rm. 102 Wall	Gray Non-Fibrous Homogeneous		100% Non-fibrous (other)	**None Detected**
9-Adhesive *121200562-0009A*	4" Rubber Basecove W Adhesive/Gray - Special Ed./Rm. 102 Wall	White Non-Fibrous Homogeneous		100% Non-fibrous (other)	**None Detected**
10-Basecove *121200562-0010*	4" Rubber Basecove W Adhesive/Gray - Special Ed./Rm. 103 Wall	Gray Non-Fibrous Homogeneous		100% Non-fibrous (other)	**None Detected**
			No Adhesive present.		
11-Drywall *121200562-0011*	Dywall W Joint Compound - Special Ed./Rm. 101 Wall	Brown/White Fibrous Heterogeneous	10% Cellulose 2% Glass	3% Non-fibrous (other) 85% Gypsum	**None Detected**

Analyst(s)

Carlos Rivadeneyra (11)
Mike J. Williams (25)

Michelle Wilson

Michelle Wilson, Laboratory Manager
or other approved signatory

EMSL maintains liability limited to cost of analysis. This report relates only to the samples reported and may not be reproduced, except in full, without written approval by EMSL. EMSL bears no responsibility for sample collection activities or analytical method limitations. Interpretation and use of test results are the responsibility of the client. This report must not be used by the client to claim product certification, approval, or endorsement by NVLAP, NIST or any agency of the federal government. Non-friable organically bound materials present a problem matrix and therefore EMSL recommends gravimetric reduction prior to analysis. Samples received in good condition unless otherwise noted. Estimated accuracy, precision and uncertainty data available upon request.
Samples analyzed by EMSL Analytical, Inc. Phoenix, AZ NVLAP Lab Code 200811-0, AZ0937

Initial report from 02/13/2012 16:39:09

EMSL Analytical, Inc.
3356 West Catalina Drive, Phoenix, AZ 85017
Phone/Fax: (602) 276-4344 / (602) 276-4053
www.emsl.com phoenixlab@emsl.com

EMSL Order:	121200562
CustomerID:	32BAIN21
CustomerPO:	
ProjectID:	

Attn: **Dan Maiha**
Bainbridge Environmental Consultants
2670 North Main Street
Suite 320
Santa Ana, CA 92705

Phone:	(714) 247-0024
Fax:	(714) 247-0025
Received:	02/13/12 10:00 AM
Analysis Date:	2/13/2012
Collected:	

Project: **Muir ES Building 4**

Test Report: Asbestos Analysis of Bulk Materials via EPA 600/R-93/116 and/or EPA 600/M4-82-020 Method(s) using Polarized Light Microscopy

Sample	Description	Appearance	Non-Asbestos %	Fibrous	Non-Asbestos %	Non-Fibrous	Asbestos % Type
11-Joint Compound *121200562-0011A*	Dywall W Joint Compound - Special Ed./Rm. 101 Wall	White Non-Fibrous Homogeneous			100%	Non-fibrous (other)	**None Detected**
11-Texture *121200562-0011B*	Dywall W Joint Compound - Special Ed./Rm. 101 Wall	White Non-Fibrous Homogeneous			100%	Non-fibrous (other)	**None Detected**
12-Drywall *121200562-0012*	Dywall W Joint Compound - Special Ed./Rm. 102 Wall	Brown/White Fibrous Heterogeneous	10% 2%	Cellulose Glass	3% 85%	Non-fibrous (other) Gypsum	**None Detected**
12-Joint Compound *121200562-0012A*	Dywall W Joint Compound - Special Ed./Rm. 102 Wall	White Non-Fibrous Homogeneous			100%	Non-fibrous (other)	**None Detected**
12-Texture *121200562-0012B*	Dywall W Joint Compound - Special Ed./Rm. 102 Wall	White Non-Fibrous Homogeneous			100%	Non-fibrous (other)	**None Detected**
13-Drywall *121200562-0013*	Dywall W Joint Compound - Special Ed./Rm. 103 Wall	Brown/White Fibrous Heterogeneous	10% 2%	Cellulose Glass	3% 85%	Non-fibrous (other) Gypsum	**None Detected**

Analyst(s)

Carlos Rivadeneyra (11)
Mike J. Williams (25)

Michelle Wilson

Michelle Wilson, Laboratory Manager
or other approved signatory

EMSL maintains liability limited to cost of analysis. This report relates only to the samples reported and may not be reproduced, except in full, without written approval by EMSL. EMSL bears no responsibility for sample collection activities or analytical method limitations. Interpretation and use of test results are the responsibility of the client. This report must not be used by the client to claim product certification, approval, or endorsement by NVLAP, NIST or any agency of the federal government. Non-friable organically bound materials present a problem matrix and therefore EMSL recommends gravimetric reduction prior to analysis. Samples received in good condition unless otherwise noted. Estimated accuracy, precision and uncertainty data available upon request.

Samples analyzed by EMSL Analytical, Inc. Phoenix, AZ NVLAP Lab Code 200811-0, AZ0937

Initial report from 02/13/2012 16:39:09

EMSL Analytical, Inc.
3356 West Catalina Drive, Phoenix, AZ 85017
Phone/Fax: (602) 276-4344 / (602) 276-4053
www.emsl.com phoenixlab@emsl.com

EMSL Order:	121200562
CustomerID:	32BAIN21
CustomerPO:	
ProjectID:	

Attn: **Dan Maiha**
Bainbridge Environmental Consultants
2670 North Main Street
Suite 320
Santa Ana, CA 92705

Phone:	(714) 247-0024
Fax:	(714) 247-0025
Received:	02/13/12 10:00 AM
Analysis Date:	2/13/2012
Collected:	

Project: **Muir ES Building 4**

Test Report: Asbestos Analysis of Bulk Materials via EPA 600/R-93/116 and/or EPA 600/M4-82-020 Method(s) using Polarized Light Microscopy

Sample	Description	Appearance	Non-Asbestos % Fibrous	Non-Asbestos % Non-Fibrous	Asbestos % Type
13-Joint Compound *121200562-0013A*	Dywall W Joint Compound - Special Ed./Rm. 103 Wall	White Non-Fibrous Homogeneous		100% Non-fibrous (other)	**None Detected**
13-Texture *121200562-0013B*	Dywall W Joint Compound - Special Ed./Rm. 103 Wall	White Non-Fibrous Homogeneous		100% Non-fibrous (other)	**None Detected**
14 *121200562-0014*	2'x4' Ceiling Panel/White - Special Ed./Rm 103 Ceiling	White Fibrous Homogeneous	90% Min. Wool	10% Non-fibrous (other)	**None Detected**
15 *121200562-0015*	2'x4' Ceiling Panel/White - Special Ed./Rm 102 Ceiling	White Fibrous Homogeneous	90% Min. Wool	10% Non-fibrous (other)	**None Detected**
16 *121200562-0016*	2'x4' Ceiling Panel/White - Special Ed./Rm 101 Ceiling	White Fibrous Homogeneous	90% Min. Wool	10% Non-fibrous (other)	**None Detected**
17-Floor Tile *121200562-0017*	12-Inch Floor Tile W/Mastic/Gray - Special Ed./Rm. 101 Entryway Floor	Gray Non-Fibrous Homogeneous		100% Non-fibrous (other)	**None Detected**

Analyst(s)

Carlos Rivadeneyra (11)
Mike J. Williams (25)

Michelle Wilson

Michelle Wilson, Laboratory Manager
or other approved signatory

EMSL maintains liability limited to cost of analysis. This report relates only to the samples reported and may not be reproduced, except in full, without written approval by EMSL. EMSL bears no responsibility for sample collection activities or analytical method limitations. Interpretation and use of test results are the responsibility of the client. This report must not be used by the client to claim product certification, approval, or endorsement by NVLAP, NIST or any agency of the federal government. Non-friable organically bound materials present a problem matrix and therefore EMSL recommends gravimetric reduction prior to analysis. Samples received in good condition unless otherwise noted. Estimated accuracy, precision and uncertainty data available upon request.
Samples analyzed by EMSL Analytical, Inc. Phoenix, AZ NVLAP Lab Code 200811-0, AZ0937

Initial report from 02/13/2012 16:39:09

EMSL Analytical, Inc.
3356 West Catalina Drive, Phoenix, AZ 85017
Phone/Fax: (602) 276-4344 / (602) 276-4053
www.emsl.com phoenixlab@emsl.com

EMSL Order:	121200562
CustomerID:	32BAIN21
CustomerPO:	
ProjectID:	

Attn: **Dan Maiha**
Bainbridge Environmental Consultants
2670 North Main Street
Suite 320
Santa Ana, CA 92705

Phone:	(714) 247-0024
Fax:	(714) 247-0025
Received:	02/13/12 10:00 AM
Analysis Date:	2/13/2012
Collected:	

Project: **Muir ES Building 4**

Test Report: Asbestos Analysis of Bulk Materials via EPA 600/R-93/116 and/or EPA 600/M4-82-020 Method(s) using Polarized Light Microscopy

			Non-Asbestos		Asbestos
Sample	**Description**	**Appearance**	**% Fibrous**	**% Non-Fibrous**	**% Type**
17-Mastic *121200562-0017A*	12-Inch Floor Tile W/Mastic/Gray - Special Ed./Rm. 101 Entryway Floor	Tan Non-Fibrous Homogeneous		100% Non-fibrous (other)	**None Detected**
18-Floor Tile *121200562-0018*	12-Inch Floor Tile W/Mastic/Gray - Special Ed./Rm. 102 Entryway Floor	Gray Non-Fibrous Homogeneous		100% Non-fibrous (other)	**None Detected**
18-Mastic *121200562-0018A*	12-Inch Floor Tile W/Mastic/Gray - Special Ed./Rm. 102 Entryway Floor	Tan Non-Fibrous Homogeneous		100% Non-fibrous (other)	**None Detected**
19-Floor Tile *121200562-0019*	12-Inch Floor Tile W/Mastic/Gray - Special Ed./Rm. 103 Entryway Floor	Gray Non-Fibrous Homogeneous		100% Non-fibrous (other)	**None Detected**
19-Mastic *121200562-0019A*	12-Inch Floor Tile W/Mastic/Gray - Special Ed./Rm. 103 Entryway Floor	Tan Non-Fibrous Homogeneous		100% Non-fibrous (other)	**None Detected**

Analyst(s)

Carlos Rivadeneyra (11)
Mike J. Williams (25)

Michelle Wilson

Michelle Wilson, Laboratory Manager
or other approved signatory

EMSL maintains liability limited to cost of analysis. This report relates only to the samples reported and may not be reproduced, except in full, without written approval by EMSL. EMSL bears no responsibility for sample collection activities or analytical method limitations. Interpretation and use of test results are the responsibility of the client. This report must not be used by the client to claim product certification, approval, or endorsement by NVLAP, NIST or any agency of the federal government. Non-friable organically bound materials present a problem matrix and therefore EMSL recommends gravimetric reduction prior to analysis. Samples received in good condition unless otherwise noted. Estimated accuracy, precision and uncertainty data available upon request.
Samples analyzed by EMSL Analytical, Inc. Phoenix, AZ NVLAP Lab Code 200811-0, AZ0937

Initial report from 02/13/2012 16:39:09

THIS IS THE LAST PAGE OF THE REPORT.

ASBESTOS BULK SAMPLE

Client: SAUSD
Project Name: Muir ES Building 5
Address: 1951 Mabury Street
Santa Ana, CA 92705

BEC Project Number: 12014043.10
Inspector/Sampler: D. Mai Ha/K. Cisco
Date Sampled: 2/8/2012

BAINBRIDGE
Environmental Consultants

Sample Number	Building	Sample Location	Sample Description/Color	Material Location	Approx. Quantity	Results
1	Building 5	Exterior Wall-North	Stucco/Beige	Exterior Walls Throughout	-	None Detected
2	Building 5	Exterior Wall-Northeast	Stucco/Beige		-	None Detected
3	Building 5	Exterior Wall-East	Stucco/Beige		-	None Detected
4	Building 5	Exterior Wall-South	Stucco/Beige		-	None Detected
5	Building 5	Exterior Wall-Southwest	Stucco/Beige		-	None Detected
6	Building 5	Exterior Wall-West	Stucco/Beige		-	None Detected
7	Building 5	Exterior Wall-West	Stucco/Beige		-	None Detected
8	Building 5	Classroom 113 Wall	4" Rubber Basecove w Adhesive/Gray	Basecoves Throughout	-	None Detected
9	Building 5	Classroom 114 Wall	4" Rubber Basecove w Adhesive/Gray		-	None Detected
10	Building 5	Classroom 115 Wall	4" Rubber Basecove w Adhesive/Gray		-	None Detected
11	Building 5	Classroom 113 Elect. Closet Wall	Drywall w Joint Compound	Walls & Ceilings Throughout	-	None Detected
12	Building 5	Classroom 114 Elect. Closet Wall	Drywall w Joint Compound		-	None Detected
13	Building 5	Classroom 115 Elect. Closet Wall	Drywall w Joint Compound		-	None Detected
14	Building 5	Classroom 113 Ceiling	2' x 4' Ceiling Panel/White	Classroom Drop Ceilings Throughout	-	None Detected
15	Building 5	Classroom 114 Ceiling	2' x 4' Ceiling Panel/White		-	None Detected
16	Building 5	Classroom 115 Ceiling	2' x 4' Ceiling Panel/White		-	None Detected

2670 North Main Street, Suite 320
Santa Ana, CA 92705

(714) 247-0024
Fax (714) 247-0025

ASBESTOS BULK SAMPLE

SAUSD – Muir Elementary School

BAINBRIDGE
Environmental Consultants

Sample Number	Building	Sample Location	Sample Description/Color	Material Location	Approx. Quantity	Results
17	Building 5	Classroom 113 Floor	12-inch Floor Tile w Mastic/Gray	12-inch Floor Tiles Throughout	-	None Detected
18	Building 5	Classroom 114 Floor	12-inch Floor Tile w Mastic/Gray		-	None Detected
19	Building 5	Classroom 115 Floor	12-inch Floor Tile w Mastic/Gray		-	None Detected
20	Building 5	Rooftop at Surface-North	Tar Gravel/Black	Roofing Throughout	-	None Detected
21	Building 5	Parapet Wall-East	Tar Gravel/Black		-	None Detected
22	Building 5	Parapet Wall-East	Tar Gravel/Black		-	None Detected
23a	Building 5	Rooftop at Pipe Penetration-South	Roof Penetration Paint/Silver	Roof Penetration Mastics Throughout	400sf	2% Chrysotile
23b	Building 5	Rooftop at Pipe Penetration-South	Roof Penetration Mastic/Black		-	None Detected
24a	Building 5	Rooftop at HVAC Penetration-West	Roof Penetration Paint/Silver		400sf	2% Chrysotile
24b	Building 5	Rooftop at HVAC Penetration-West	Roof Penetration Mastic/Black		-	None Detected
25a	Building 5	Rooftop at Seams and Patches/NW	Roof Penetration Paint/Silver		400sf	2% Chrysotile
25b	Building 5	Rooftop at Seams and Patches/NW	Roof Penetration Mastic/Black		-	None Detected
26	Building 5	Rooftop Flashing Cap Joint	Poxy/Caulking	Flashing Cap Joints Throughout	-	None Detected
--	Building 5	Inaccessible	Fire Doors	Throughout Building	--	Assumed

2670 North Main Street, Suite 320
Santa Ana, CA 92705

(714) 247-0024
Fax (714) 247-0025

EMSL Analytical, Inc.
3356 West Catalina Drive, Phoenix, AZ 85017
Phone/Fax: (602) 276-4344 / (602) 276-4053
www.emsl.com phoenixlab@emsl.com

EMSL Order:	121200557
CustomerID:	32BAIN21
CustomerPO:	
ProjectID:	

Attn: **Dan Maiha**
Bainbridge Environmental Consultants
2670 North Main Street
Suite 320
Santa Ana, CA 92705

Phone:	(714) 247-0024
Fax:	(714) 247-0025
Received:	02/13/12 10:00 AM
Analysis Date:	2/14/2012
Collected:	

Project: **Muir ES Building 5**

Test Report: Asbestos Analysis of Bulk Materials via EPA 600/R-93/116 and/or EPA 600/M4-82-020 Method(s) using Polarized Light Microscopy

Sample	Description	Appearance	Non-Asbestos % Fibrous	Non-Asbestos % Non-Fibrous	Asbestos % Type
1-Skim Coat *121200557-0001*	Stucco/Beige - Exterior Wall-North	Beige Non-Fibrous Homogeneous		100% Non-fibrous (other)	**None Detected**
1-Base Coat *121200557-0001A*	Stucco/Beige - Exterior Wall-North	Gray Non-Fibrous Homogeneous		100% Non-fibrous (other)	**None Detected**
2-Skim Coat *121200557-0002*	Stucco/Beige - Exterior Wall-Northeast	Beige Non-Fibrous Homogeneous		100% Non-fibrous (other)	**None Detected**
2-Base Coat *121200557-0002A*	Stucco/Beige - Exterior Wall-Northeast	Gray Non-Fibrous Homogeneous		100% Non-fibrous (other)	**None Detected**
3-Skim Coat *121200557-0003*	Stucco/Beige - Exterior Wall-East	Beige Non-Fibrous Homogeneous		100% Non-fibrous (other)	**None Detected**
3-Base Coat *121200557-0003A*	Stucco/Beige - Exterior Wall-East	Gray Non-Fibrous Homogeneous		100% Non-fibrous (other)	**None Detected**
4-Skim Coat *121200557-0004*	Stucco/Beige - Exterior Wall-South	Beige Non-Fibrous Homogeneous		100% Non-fibrous (other)	**None Detected**

Analyst(s)

Amanda Lang (18)
Carlos Rivadeneyra (33)

Michelle Wilson

Michelle Wilson, Laboratory Manager
or other approved signatory

EMSL maintains liability limited to cost of analysis. This report relates only to the samples reported and may not be reproduced, except in full, without written approval by EMSL. EMSL bears no responsibility for sample collection activities or analytical method limitations. Interpretation and use of test results are the responsibility of the client. This report must not be used by the client to claim product certification, approval, or endorsement by NVLAP, NIST or any agency of the federal government. Non-friable organically bound materials present a problem matrix and therefore EMSL recommends gravimetric reduction prior to analysis. Samples received in good condition unless otherwise noted. Estimated accuracy, precision and uncertainty data available upon request.
Samples analyzed by EMSL Analytical, Inc. Phoenix, AZ NVLAP Lab Code 200811-0, AZ0937

Initial report from 02/14/2012 09:20:29

EMSL Analytical, Inc.
3356 West Catalina Drive, Phoenix, AZ 85017
Phone/Fax: (602) 276-4344 / (602) 276-4053
www.emsl.com phoenixlab@emsl.com

EMSL Order:	121200557
CustomerID:	32BAIN21
CustomerPO:	
ProjectID:	

Attn: **Dan Maiha**
Bainbridge Environmental Consultants
2670 North Main Street
Suite 320
Santa Ana, CA 92705

Phone:	(714) 247-0024
Fax:	(714) 247-0025
Received:	02/13/12 10:00 AM
Analysis Date:	2/14/2012
Collected:	

Project: **Muir ES Building 5**

Test Report: Asbestos Analysis of Bulk Materials via EPA 600/R-93/116 and/or EPA 600/M4-82-020 Method(s) using Polarized Light Microscopy

Sample	Description	Appearance	Non-Asbestos % Fibrous	Non-Asbestos % Non-Fibrous	Asbestos % Type
4-Base Coat *121200557-0004A*	Stucco/Beige - Exterior Wall-South	Gray Non-Fibrous Homogeneous		100% Non-fibrous (other)	**None Detected**
5-Skim Coat *121200557-0005*	Stucco/Beige - Exterior Wall-Southwest	Beige Non-Fibrous Homogeneous		100% Non-fibrous (other)	**None Detected**
5-Base Coat *121200557-0005A*	Stucco/Beige - Exterior Wall-Southwest	Gray Non-Fibrous Homogeneous		100% Non-fibrous (other)	**None Detected**
6-Skim Coat *121200557-0006*	Stucco/Beige - Exterior Wall-West	Beige Non-Fibrous Homogeneous		100% Non-fibrous (other)	**None Detected**
6-Base Coat *121200557-0006A*	Stucco/Beige - Exterior Wall-West	Gray Non-Fibrous Homogeneous		100% Non-fibrous (other)	**None Detected**
7-Skim Coat *121200557-0007*	Stucco/Beige - Exterior Wall-West	Non-Fibrous Heterogeneous		100% Non-fibrous (other)	**None Detected**
7-Base Coat *121200557-0007A*	Stucco/Beige - Exterior Wall-West	Gray Non-Fibrous Homogeneous		100% Non-fibrous (other)	**None Detected**

Analyst(s)

Amanda Lang (18)
Carlos Rivadeneyra (33)

Michelle Wilson

Michelle Wilson, Laboratory Manager
or other approved signatory

EMSL maintains liability limited to cost of analysis. This report relates only to the samples reported and may not be reproduced, except in full, without written approval by EMSL. EMSL bears no responsibility for sample collection activities or analytical method limitations. Interpretation and use of test results are the responsibility of the client. This report must not be used by the client to claim product certification, approval, or endorsement by NVLAP, NIST or any agency of the federal government. Non-friable organically bound materials present a problem matrix and therefore EMSL recommends gravimetric reduction prior to analysis. Samples received in good condition unless otherwise noted. Estimated accuracy, precision and uncertainty data available upon request.
Samples analyzed by EMSL Analytical, Inc. Phoenix, AZ NVLAP Lab Code 200811-0, AZ0937

Initial report from 02/14/2012 09:20:29

EMSL Analytical, Inc.
3356 West Catalina Drive, Phoenix, AZ 85017
Phone/Fax: (602) 276-4344 / (602) 276-4053
www.emsl.com phoenixlab@emsl.com

EMSL Order:	121200557
CustomerID:	32BAIN21
CustomerPO:	
ProjectID:	

Attn: **Dan Maiha**
Bainbridge Environmental Consultants
2670 North Main Street
Suite 320
Santa Ana, CA 92705

Phone:	(714) 247-0024
Fax:	(714) 247-0025
Received:	02/13/12 10:00 AM
Analysis Date:	2/14/2012
Collected:	

Project: **Muir ES Building 5**

Test Report: Asbestos Analysis of Bulk Materials via EPA 600/R-93/116 and/or EPA 600/M4-82-020 Method(s) using Polarized Light Microscopy

Sample	Description	Appearance	Non-Asbestos % Fibrous	Non-Asbestos % Non-Fibrous	Asbestos % Type
8-Basecove *121200557-0008*	4" Rubber Basecove W Adhesive/Gray - Classroom 113 Wall	Gray Non-Fibrous Homogeneous		100% Non-fibrous (other)	**None Detected**
8-Adhesive *121200557-0008A*	4" Rubber Basecove W Adhesive/Gray - Classroom 113 Wall	Beige Non-Fibrous Homogeneous		100% Non-fibrous (other)	**None Detected**
9-Basecove *121200557-0009*	4" Rubber Basecove W Adhesive/Gray - Classroom 114 Wall	Gray Non-Fibrous Homogeneous		100% Non-fibrous (other)	**None Detected**
9-Mastic *121200557-0009A*	4" Rubber Basecove W Adhesive/Gray - Classroom 114 Wall	Beige Non-Fibrous Homogeneous		100% Non-fibrous (other)	**None Detected**
10-Basecove *121200557-0010*	4" Rubber Basecove W Adhesive/Gray - Classroom 115 Wall	Gray Non-Fibrous Homogeneous		100% Non-fibrous (other)	**None Detected**

Analyst(s)

Amanda Lang (18)
Carlos Rivadeneyra (33)

Michelle Wilson

Michelle Wilson, Laboratory Manager
or other approved signatory

EMSL maintains liability limited to cost of analysis. This report relates only to the samples reported and may not be reproduced, except in full, without written approval by EMSL. EMSL bears no responsibility for sample collection activities or analytical method limitations. Interpretation and use of test results are the responsibility of the client. This report must not be used by the client to claim product certification, approval, or endorsement by NVLAP, NIST or any agency of the federal government. Non-friable organically bound materials present a problem matrix and therefore EMSL recommends gravimetric reduction prior to analysis. Samples received in good condition unless otherwise noted. Estimated accuracy, precision and uncertainty data available upon request.
Samples analyzed by EMSL Analytical, Inc. Phoenix, AZ NVLAP Lab Code 200811-0, AZ0937

Initial report from 02/14/2012 09:20:29

EMSL Analytical, Inc.
3356 West Catalina Drive, Phoenix, AZ 85017
Phone/Fax: (602) 276-4344 / (602) 276-4053
www.emsl.com phoenixlab@emsl.com

EMSL Order:	121200557
CustomerID:	32BAIN21
CustomerPO:	
ProjectID:	

Attn: **Dan Maiha**
Bainbridge Environmental Consultants
2670 North Main Street
Suite 320
Santa Ana, CA 92705

Phone:	(714) 247-0024
Fax:	(714) 247-0025
Received:	02/13/12 10:00 AM
Analysis Date:	2/14/2012
Collected:	

Project: **Muir ES Building 5**

Test Report: Asbestos Analysis of Bulk Materials via EPA 600/R-93/116 and/or EPA 600/M4-82-020 Method(s) using Polarized Light Microscopy

Sample	Description	Appearance	Non-Asbestos %	Fibrous	Non-Asbestos %	Non-Fibrous	Asbestos % Type
10-Mastic *121200557-0010A*	4" Rubber Basecove W Adhesive/Gray - Classroom 115 Wall	Beige Non-Fibrous Homogeneous			100%	Non-fibrous (other)	**None Detected**
11-Drywall *121200557-0011*	Drywall W Joint Compound - Classroom 113 Elect. Closet Wall	White Non-Fibrous Homogeneous	3% 2%	Cellulose Glass	5% 90%	Non-fibrous (other) Gypsum	**None Detected**
11-Joint Compound *121200557-0011A*	Drywall W Joint Compound - Classroom 113 Elect. Closet Wall	White Non-Fibrous Homogeneous			100%	Non-fibrous (other)	**None Detected**
12-Drywall *121200557-0012*	Drywall W Joint Compound - Classroom 114 Elect. Closet Wall	Brown/White Fibrous Heterogeneous	10% 2%	Cellulose Glass	3% 85%	Non-fibrous (other) Gypsum	**None Detected**
12-Joint Compound *121200557-0012A*	Drywall W Joint Compound - Classroom 114 Elect. Closet Wall	White Non-Fibrous Homogeneous			100%	Non-fibrous (other)	**None Detected**
13-Drywall *121200557-0013*	Drywall W Joint Compound - Classroom 115 Elect. Closet Wall	Brown/White Fibrous Heterogeneous	10% 2%	Cellulose Glass	3% 85%	Non-fibrous (other) Gypsum	**None Detected**

Analyst(s)

Amanda Lang (18)
Carlos Rivadeneyra (33)

Michelle Wilson

Michelle Wilson, Laboratory Manager
or other approved signatory

EMSL maintains liability limited to cost of analysis. This report relates only to the samples reported and may not be reproduced, except in full, without written approval by EMSL. EMSL bears no responsibility for sample collection activities or analytical method limitations. Interpretation and use of test results are the responsibility of the client. This report must not be used by the client to claim product certification, approval, or endorsement by NVLAP, NIST or any agency of the federal government. Non-friable organically bound materials present a problem matrix and therefore EMSL recommends gravimetric reduction prior to analysis. Samples received in good condition unless otherwise noted. Estimated accuracy, precision and uncertainty data available upon request.
Samples analyzed by EMSL Analytical, Inc. Phoenix, AZ NVLAP Lab Code 200811-0, AZ0937

Initial report from 02/14/2012 09:20:29

EMSL Analytical, Inc.
3356 West Catalina Drive, Phoenix, AZ 85017
Phone/Fax: (602) 276-4344 / (602) 276-4053
www.emsl.com phoenixlab@emsl.com

EMSL Order:	121200557
CustomerID:	32BAIN21
CustomerPO:	
ProjectID:	

Attn: **Dan Maiha**
Bainbridge Environmental Consultants
2670 North Main Street
Suite 320
Santa Ana, CA 92705

Phone:	(714) 247-0024
Fax:	(714) 247-0025
Received:	02/13/12 10:00 AM
Analysis Date:	2/14/2012
Collected:	

Project: **Muir ES Building 5**

Test Report: Asbestos Analysis of Bulk Materials via EPA 600/R-93/116 and/or EPA 600/M4-82-020 Method(s) using Polarized Light Microscopy

Sample	Description	Appearance	Non-Asbestos %	Fibrous	Non-Asbestos %	Non-Fibrous	Asbestos % Type
13-Joint Compound *121200557-0013A*	Drywall W Joint Compound - Classroom 115 Elect. Closet Wall	White Non-Fibrous Homogeneous			100%	Non-fibrous (other)	**None Detected**
14 *121200557-0014*	2'x4' Ceiling Panel/White - Classroom 113 Ceiling	Gray Fibrous Homogeneous	95%	Min. Wool	5%	Non-fibrous (other)	**None Detected**
15 *121200557-0015*	2'x4' Ceiling Panel/White - Classroom 114 Ceiling	Gray Fibrous Homogeneous	95%	Min. Wool	5%	Non-fibrous (other)	**None Detected**
16 *121200557-0016*	2'x4' Ceiling Panel/White - Classroom 115 Ceiling	Gray Fibrous Homogeneous	95%	Min. Wool	5%	Non-fibrous (other)	**None Detected**
17-Floor Tile *121200557-0017*	12-Inch Floor Tile W Mastic/Gray - Classroom 113 Floor	Gray Non-Fibrous Homogeneous			100%	Non-fibrous (other)	**None Detected**
17-Mastic *121200557-0017A*	12-Inch Floor Tile W Mastic/Gray - Classroom 113 Floor	Tan Non-Fibrous Homogeneous			100%	Non-fibrous (other)	**None Detected**

Analyst(s)

Amanda Lang (18)
Carlos Rivadeneyra (33)

Michelle Wilson

Michelle Wilson, Laboratory Manager
or other approved signatory

EMSL maintains liability limited to cost of analysis. This report relates only to the samples reported and may not be reproduced, except in full, without written approval by EMSL. EMSL bears no responsibility for sample collection activities or analytical method limitations. Interpretation and use of test results are the responsibility of the client. This report must not be used by the client to claim product certification, approval, or endorsement by NVLAP, NIST or any agency of the federal government. Non-friable organically bound materials present a problem matrix and therefore EMSL recommends gravimetric reduction prior to analysis. Samples received in good condition unless otherwise noted. Estimated accuracy, precision and uncertainty data available upon request.
Samples analyzed by EMSL Analytical, Inc. Phoenix, AZ NVLAP Lab Code 200811-0, AZ0937

Initial report from 02/14/2012 09:20:29

EMSL Analytical, Inc.
3356 West Catalina Drive, Phoenix, AZ 85017
Phone/Fax: (602) 276-4344 / (602) 276-4053
www.emsl.com phoenixlab@emsl.com

EMSL Order:	121200557
CustomerID:	32BAIN21
CustomerPO:	
ProjectID:	

Attn: **Dan Maiha**
Bainbridge Environmental Consultants
2670 North Main Street
Suite 320
Santa Ana, CA 92705

Phone:	(714) 247-0024
Fax:	(714) 247-0025
Received:	02/13/12 10:00 AM
Analysis Date:	2/14/2012
Collected:	

Project: **Muir ES Building 5**

Test Report: Asbestos Analysis of Bulk Materials via EPA 600/R-93/116 and/or EPA 600/M4-82-020 Method(s) using Polarized Light Microscopy

Sample	Description	Appearance	Non-Asbestos %	Fibrous	Non-Asbestos %	Non-Fibrous	Asbestos % Type
18-Floor Tile *121200557-0018*	12-Inch Floor Tile W Mastic/Gray - Classroom 114 Floor	Gray Non-Fibrous Homogeneous			100%	Non-fibrous (other)	**None Detected**
18-Mastic *121200557-0018A*	12-Inch Floor Tile W Mastic/Gray - Classroom 114 Floor	Tan Non-Fibrous Homogeneous			100%	Non-fibrous (other)	**None Detected**
19-Floor Tile *121200557-0019*	12-Inch Floor Tile W Mastic/Gray - Classroom 115 Floor	Gray Non-Fibrous Homogeneous			100%	Non-fibrous (other)	**None Detected**
19-Mastic *121200557-0019A*	12-Inch Floor Tile W Mastic/Gray - Classroom 115 Floor	Tan Non-Fibrous Homogeneous			100%	Non-fibrous (other)	**None Detected**
20-Shingle *121200557-0020*	Tar Gravel/Black - Rooftop At Surface-North	White/Black Fibrous Heterogeneous	10%	Glass	90%	Non-fibrous (other)	**None Detected**
20-Roofing *121200557-0020A*	Tar Gravel/Black - Rooftop At Surface-North	Black Fibrous Homogeneous	10%	Glass	90%	Non-fibrous (other)	**None Detected**
20-Fiberboard *121200557-0020B*	Tar Gravel/Black - Rooftop At Surface-North	Tan Fibrous Homogeneous	100%	Cellulose	0%	Non-fibrous (other)	**None Detected**

Analyst(s)

Amanda Lang (18)
Carlos Rivadeneyra (33)

Michelle Wilson

Michelle Wilson, Laboratory Manager
or other approved signatory

EMSL maintains liability limited to cost of analysis. This report relates only to the samples reported and may not be reproduced, except in full, without written approval by EMSL. EMSL bears no responsibility for sample collection activities or analytical method limitations. Interpretation and use of test results are the responsibility of the client. This report must not be used by the client to claim product certification, approval, or endorsement by NVLAP, NIST or any agency of the federal government. Non-friable organically bound materials present a problem matrix and therefore EMSL recommends gravimetric reduction prior to analysis. Samples received in good condition unless otherwise noted. Estimated accuracy, precision and uncertainty data available upon request.
Samples analyzed by EMSL Analytical, Inc. Phoenix, AZ NVLAP Lab Code 200811-0, AZ0937

Initial report from 02/14/2012 09:20:29

EMSL Analytical, Inc.
3356 West Catalina Drive, Phoenix, AZ 85017
Phone/Fax: (602) 276-4344 / (602) 276-4053
www.emsl.com phoenixlab@emsl.com

EMSL Order:	121200557
CustomerID:	32BAIN21
CustomerPO:	
ProjectID:	

Attn: **Dan Maiha**
Bainbridge Environmental Consultants
2670 North Main Street
Suite 320
Santa Ana, CA 92705

Phone:	(714) 247-0024
Fax:	(714) 247-0025
Received:	02/13/12 10:00 AM
Analysis Date:	2/14/2012
Collected:	

Project: **Muir ES Building 5**

Test Report: Asbestos Analysis of Bulk Materials via EPA 600/R-93/116 and/or EPA 600/M4-82-020 Method(s) using Polarized Light Microscopy

Sample	Description	Appearance	Non-Asbestos %	Fibrous	Non-Asbestos %	Non-Fibrous	Asbestos % Type
21-Shingle *121200557-0021*	Tar Gravel/Black - Parapet Wall-East	White/Black Fibrous Heterogeneous	10%	Glass	90%	Non-fibrous (other)	**None Detected**
21-Roofing *121200557-0021A*	Tar Gravel/Black - Parapet Wall-East	Black Fibrous Homogeneous	10%	Glass	90%	Non-fibrous (other)	**None Detected**
21-Fiberboard *121200557-0021B*	Tar Gravel/Black - Parapet Wall-East	Tan Fibrous Homogeneous	100%	Cellulose	0%	Non-fibrous (other)	**None Detected**
22-Shingle *121200557-0022*	Tar Gravel/Black - Parapet Wall-East	White/Black Fibrous Heterogeneous	10%	Glass	90%	Non-fibrous (other)	**None Detected**
22-Roofing *121200557-0022A*	Tar Gravel/Black - Parapet Wall-East	Black Fibrous Homogeneous	10%	Glass	90%	Non-fibrous (other)	**None Detected**
22-Fiberboard *121200557-0022B*	Tar Gravel/Black - Parapet Wall-East	Tan Fibrous Homogeneous	100%	Cellulose	0%	Non-fibrous (other)	**None Detected**
23-Paint *121200557-0023*	Roof Penetration Mastic/Black - Rooftop At Pipe Penetration-South	Silver Non-Fibrous Homogeneous			98%	Non-fibrous (other)	**2% Chrysotile**

Analyst(s)

Amanda Lang (18)
Carlos Rivadeneyra (33)

Michelle Wilson

Michelle Wilson, Laboratory Manager
or other approved signatory

EMSL maintains liability limited to cost of analysis. This report relates only to the samples reported and may not be reproduced, except in full, without written approval by EMSL. EMSL bears no responsibility for sample collection activities or analytical method limitations. Interpretation and use of test results are the responsibility of the client. This report must not be used by the client to claim product certification, approval, or endorsement by NVLAP, NIST or any agency of the federal government. Non-friable organically bound materials present a problem matrix and therefore EMSL recommends gravimetric reduction prior to analysis. Samples received in good condition unless otherwise noted. Estimated accuracy, precision and uncertainty data available upon request.
Samples analyzed by EMSL Analytical, Inc. Phoenix, AZ NVLAP Lab Code 200811-0, AZ0937

Initial report from 02/14/2012 09:20:29

EMSL Analytical, Inc.
3356 West Catalina Drive, Phoenix, AZ 85017
Phone/Fax: (602) 276-4344 / (602) 276-4053
www.emsl.com phoenixlab@emsl.com

EMSL Order:	121200557
CustomerID:	32BAIN21
CustomerPO:	
ProjectID:	

Attn: **Dan Maiha**
Bainbridge Environmental Consultants
2670 North Main Street
Suite 320
Santa Ana, CA 92705

Phone:	(714) 247-0024
Fax:	(714) 247-0025
Received:	02/13/12 10:00 AM
Analysis Date:	2/14/2012
Collected:	

Project: **Muir ES Building 5**

Test Report: Asbestos Analysis of Bulk Materials via EPA 600/R-93/116 and/or EPA 600/M4-82-020 Method(s) using Polarized Light Microscopy

Sample	Description	Appearance	Non-Asbestos % Fibrous	Non-Asbestos % Non-Fibrous	Asbestos % Type
23-Mastic *121200557-0023A*	Roof Penetration Mastic/Black - Rooftop At Pipe Penetration-South	Black Fibrous Homogeneous	10% Cellulose	90% Non-fibrous (other)	**None Detected**
24-Paint *121200557-0024*	Roof Penetration Mastic/Black - Rooftope At HvAC Penetration-West	Silver Non-Fibrous Homogeneous		98% Non-fibrous (other)	**2% Chrysotile**
24-Mastic *121200557-0024A*	Roof Penetration Mastic/Black - Rooftope At HvAC Penetration-West	Black Fibrous Heterogeneous	10% Cellulose 5% Glass	85% Non-fibrous (other)	**None Detected**
25-Paint *121200557-0025*	Roof Penetration Mastic/Black - Rooftop At Seams And Patches/NW	Silver Fibrous Heterogeneous		98% Non-fibrous (other)	**2% Chrysotile**
25-Mastic *121200557-0025A*	Roof Penetration Mastic/Black - Rooftop At Seams And Patches/NW	Black Fibrous Homogeneous	10% Cellulose 5% Glass	85% Non-fibrous (other)	**None Detected**
26 *121200557-0026*	Poxy/Caulking - Rooftop Flashing Cap Joint	White Non-Fibrous Homogeneous		100% Non-fibrous (other)	**None Detected**

Analyst(s)

Amanda Lang (18)
Carlos Rivadeneyra (33)

Michelle Wilson

Michelle Wilson, Laboratory Manager
or other approved signatory

EMSL maintains liability limited to cost of analysis. This report relates only to the samples reported and may not be reproduced, except in full, without written approval by EMSL. EMSL bears no responsibility for sample collection activities or analytical method limitations. Interpretation and use of test results are the responsibility of the client. This report must not be used by the client to claim product certification, approval, or endorsement by NVLAP, NIST or any agency of the federal government. Non-friable organically bound materials present a problem matrix and therefore EMSL recommends gravimetric reduction prior to analysis. Samples received in good condition unless otherwise noted. Estimated accuracy, precision and uncertainty data available upon request.
Samples analyzed by EMSL Analytical, Inc. Phoenix, AZ NVLAP Lab Code 200811-0, AZ0937

Initial report from 02/14/2012 09:20:29

THIS IS THE LAST PAGE OF THE REPORT.

ASBESTOS BULK SAMPLE

Client: SAUSD
Project Name: Muir ES Building 6
Address: 1951 Mabury Street
Santa Ana, CA 92705

BEC Project Number: 12014043.10
Inspector/Sampler: D. Mai Ha/K. Cisco
Date Sampled: 2/8/2012

BAINBRIDGE
Environmental Consultants

Sample Number	Building	Sample Location	Sample Description/Color	Material Location	Approx. Quantity	Results
1	Building 6	Exterior Wall-North	Stucco/Beige	Exterior Walls Throughout	20,000sf	<1% Chrysotile
2	Building 6	Exterior Wall-Northeast	Stucco/Beige			<1% Chrysotile
3	Building 6	Exterior Wall-East	Stucco/Beige		-	None Detected
4	Building 6	Exterior Wall-South	Stucco/Beige		-	None Detected
5	Building 6	Exterior Wall-Southwest	Stucco/Beige		-	None Detected
6	Building 6	Exterior Wall-West	Stucco/Beige		20,000sf	<1% Chrysotile
7	Building 6	Exterior Wall-West	Stucco/Beige		-	None Detected
8	Building 6	Classroom 111 Wall	4" Rubber Basecove w Adhesive/Brown	Basecoves Throughout	-	None Detected
9	Building 6	Classroom 108 Wall	4" Rubber Basecove w Adhesive/Brown		-	None Detected
10	Building 6	Classroom 107 Wall	4" Rubber Basecove w Adhesive/Brown		-	None Detected
11	Building 6	Classroom 112B Interior Wall Panel	Gypsum Board	Interior Wall Panels Throughout	-	None Detected
12	Building 6	Classroom 108 Interior Wall Panel	Gypsum Board		-	None Detected
13	Building 6	Classroom 110 Interior Wall Panel	Gypsum Board		-	None Detected
14	Building 6	Classroom 112B-Breezeway	Vinyl Sheet Flooring/Yellow	Classroom 112B-Breezeway Flooring Only	400sf	15% Chrysotile
15	Building 6	Classroom 112B Floor	Vinyl Sheet Flooring/White	Classroom 112B Floor Only	-	None Detected

2670 North Main Street, Suite 320
Santa Ana, CA 92705

(714) 247-0024
Fax (714) 247-0025

ASBESTOS BULK SAMPLE

SAUSD – Muir Elementary School

BAINBRIDGE
Environmental Consultants

Sample Number	Building	Sample Location	Sample Description/Color	Material Location	Approx. Quantity	Results
16	Building 6	Classroom 106 Plenum	Fiberglass Blanket Insulation/Brown	Plenum Throughout	-	None Detected
17	Building 6	Classroom 111 Entryway Floor	12-inch Floor Tile w Mastic/Brown	12-inch Floor Tiles Throughout	-	None Detected
18	Building 6	Classroom 109 Floor	12-inch Floor Tile w Mastic/Brown		-	None Detected
19	Building 6	Classroom 107 Floor	12-inch Floor Tile w Mastic/Brown		-	None Detected
20	Building 6	Classroom 111 Ceiling	2' x 4' Ceiling Panel/White	Drop Ceilings Throughout	-	None Detected
21	Building 6	Classroom 109 Ceiling	2' x 4' Ceiling Panel/White		-	None Detected
22	Building 6	Classroom 107 Ceiling	2' x 4' Ceiling Panel/White		-	None Detected
23	Building 6	Boys Restroom Wall	Terrazzo/Beige	Restroom Walls Throughout	-	None Detected
24	Building 6	Girls Restroom Floor	Terrazzo Flooring/Dark Brown	Restroom Flooring Throughout	-	None Detected
25	Building 6	Classroom 112B Window Base/Transom	Transite Window Panel	Window Bases/Transoms Throughout	400sf	10% Chrysotile
26a	Building 6	Classroom 112B Floor Beneath Carpet	Vinyl Tile (VAT)/Off-White	Classroom 112B Flooring Throughout	500sf	<1% Chrysotile
26b	Building 6	Classroom 112B Floor Beneath Carpet	Vinyl Tile (VAT)Mastic/Black			7% Chrysotile
27a	Building 6	Classroom 112B Floor Beneath Carpet	Vinyl Tile (VAT)/Off-White			<1% Chrysotile
27b	Building 6	Classroom 112B Floor Beneath Carpet	Vinyl Tile (VAT)Mastic/Black			7% Chrysotile
28a	Building 6	Classroom 112B Floor Beneath Carpet	Vinyl Tile (VAT)/Off-White			<1% Chrysotile
28b	Building 6	Classroom 112B Floor Beneath Carpet	Vinyl Tile (VAT)Mastic/Black			7% Chrysotile
29	Building 6	Classroom 112B Boys Restroom Wall	Plaster/Gray	Plaster Walls Throughout	-	None Detected

2670 North Main Street, Suite 320
Santa Ana, CA 92705

(714) 247-0024
Fax (714) 247-0025

ASBESTOS BULK SAMPLE

SAUSD – Muir Elementary School

BAINBRIDGE
Environmental Consultants

Sample Number	Building	Sample Location	Sample Description/Color	Material Location	Approx. Quantity	Results
30	Building 6	Classroom 112B Boys Restroom Wall	Plaster/Gray	Plaster Walls Throughout	-	None Detected
31	Building 6	Classroom 112B Girls Restroom Wall	Plaster/Gray		-	None Detected
32	Building 6	Rooftop at Surface-North	(Sliver) Paint	Roofing Throughout	-	None Detected
33	Building 6	Rooftop at Surface-North	T/G Rolled Roofing/Black		-	None Detected
34	Building 6	Rooftop at Surface-West	(Sliver) Paint		-	None Detected
35	Building 6	Rooftop at Surface-West	T/G Rolled Roofing/Black		-	None Detected
36	Building 6	Rooftop at Surface-East	(Sliver) Paint		-	None Detected
37	Building 6	Rooftop at Surface-East	T/G Rolled Roofing/Black		-	None Detected
38	Building 6	Rooftop at HVAC Penetration-West	Roof Penetration Mastic/Black	Roof Penetration Mastics Throughout	-	None Detected
39	Building 6	Rooftop at Pipe Penetration-North	Roof Penetration Mastic/Black		-	None Detected
40	Building 6	Rooftop at Pipe Penetration-East	Roof Penetration Mastic/Black		-	None Detected
--	Building 6	Inaccessible	Fire Doors	Throughout Building	--	Assumed

2670 North Main Street, Suite 320
Santa Ana, CA 92705

(714) 247-0024
Fax (714) 247-0025

EMSL Analytical, Inc.
3356 West Catalina Drive, Phoenix, AZ 85017
Phone/Fax: (602) 276-4344 / (602) 276-4053
www.emsl.com phoenixlab@emsl.com

EMSL Order:	121200554
CustomerID:	32BAIN21
CustomerPO:	
ProjectID:	

Attn: **Dan Maiha**
Bainbridge Environmental Consultants
2670 North Main Street
Suite 320
Santa Ana, CA 92705

Phone:	(714) 247-0024
Fax:	(714) 247-0025
Received:	02/13/12 10:00 AM
Analysis Date:	2/13/2012
Collected:	

Project: **Muir ES Building 6**

Test Report: Asbestos Analysis of Bulk Materials via EPA 600/R-93/116 and/or EPA 600/M4-82-020 Method(s) using Polarized Light Microscopy

Sample	Description	Appearance	Non-Asbestos % Fibrous	Non-Asbestos % Non-Fibrous	Asbestos % Type
1 *121200554-0001*	Stucco/Beige - Exterior Wall-North	Gray/Tan/White Non-Fibrous Heterogeneous		100% Non-fibrous (other)	**<1% Chrysotile**
2 *121200554-0002*	Stucco/Beige - Exterior Wall-Northeast	Gray/Tan/White Non-Fibrous Heterogeneous		100% Non-fibrous (other)	**<1% Chrysotile**
3 *121200554-0003*	Stucco/Beige - Exterior Wall-East	Gray Non-Fibrous Homogeneous		100% Non-fibrous (other)	**None Detected**
4 *121200554-0004*	Stucco/Beige - Exterior Wall-South	Gray Non-Fibrous Homogeneous		100% Non-fibrous (other)	**None Detected**
5 *121200554-0005*	Stucco/Beige - Exterior Wall-Southwest	Gray/White Non-Fibrous Heterogeneous		100% Non-fibrous (other)	**None Detected**
6 *121200554-0006*	Stucco/Beige - Exterior Wall-West	Gray/Tan/White Non-Fibrous Heterogeneous		100% Non-fibrous (other)	**<1% Chrysotile**
7 *121200554-0007*	Stucco/Beige - Exterior Wall-West	Gray/White Non-Fibrous Heterogeneous		100% Non-fibrous (other)	**None Detected**

Analyst(s)

Amanda Lang (27)
Carlos Rivadeneyra (22)

Michelle Wilson

Michelle Wilson, Laboratory Manager
or other approved signatory

EMSL maintains liability limited to cost of analysis. This report relates only to the samples reported and may not be reproduced, except in full, without written approval by EMSL. EMSL bears no responsibility for sample collection activities or analytical method limitations. Interpretation and use of test results are the responsibility of the client. This report must not be used by the client to claim product certification, approval, or endorsement by NVLAP, NIST or any agency of the federal government. Non-friable organically bound materials present a problem matrix and therefore EMSL recommends gravimetric reduction prior to analysis. Samples received in good condition unless otherwise noted. Estimated accuracy, precision and uncertainty data available upon request.
Samples analyzed by EMSL Analytical, Inc. Phoenix, AZ NVLAP Lab Code 200811-0, AZ0937

Initial report from 02/13/2012 16:36:42

EMSL Analytical, Inc.
3356 West Catalina Drive, Phoenix, AZ 85017
Phone/Fax: (602) 276-4344 / (602) 276-4053
www.emsl.com phoenixlab@emsl.com

EMSL Order:	121200554
CustomerID:	32BAIN21
CustomerPO:	
ProjectID:	

Attn: **Dan Maiha**
Bainbridge Environmental Consultants
2670 North Main Street
Suite 320
Santa Ana, CA 92705

Phone:	(714) 247-0024
Fax:	(714) 247-0025
Received:	02/13/12 10:00 AM
Analysis Date:	2/13/2012
Collected:	

Project: **Muir ES Building 6**

Test Report: Asbestos Analysis of Bulk Materials via EPA 600/R-93/116 and/or EPA 600/M4-82-020 Method(s) using Polarized Light Microscopy

			Non-Asbestos		Asbestos
Sample	**Description**	**Appearance**	**% Fibrous**	**% Non-Fibrous**	**% Type**
8-Basecove *121200554-0008*	4" Rubber Basecove W Adhesive/Brown - Classroom 111 Wall	Brown Non-Fibrous Homogeneous		100% Non-fibrous (other)	**None Detected**
8-Adhesive *121200554-0008A*	4" Rubber Basecove W Adhesive/Brown - Classroom 111 Wall	Tan Non-Fibrous Homogeneous		100% Non-fibrous (other)	**None Detected**
9-Basecove *121200554-0009*	4" Rubber Basecove W Adhesive/Brown - Classroom 108 Wall	Brown Non-Fibrous Homogeneous		100% Non-fibrous (other)	**None Detected**
9-Adhesive *121200554-0009A*	4" Rubber Basecove W Adhesive/Brown - Classroom 108 Wall	Tan Non-Fibrous Homogeneous		100% Non-fibrous (other)	**None Detected**
10-Basecove *121200554-0010*	4" Rubber Basecove W Adhesive/Brown - Classroom 107 Wall	Brown Non-Fibrous Homogeneous		100% Non-fibrous (other)	**None Detected**

Analyst(s)

Amanda Lang (27)
Carlos Rivadeneyra (22)

Michelle Wilson

Michelle Wilson, Laboratory Manager
or other approved signatory

EMSL maintains liability limited to cost of analysis. This report relates only to the samples reported and may not be reproduced, except in full, without written approval by EMSL. EMSL bears no responsibility for sample collection activities or analytical method limitations. Interpretation and use of test results are the responsibility of the client. This report must not be used by the client to claim product certification, approval, or endorsement by NVLAP, NIST or any agency of the federal government. Non-friable organically bound materials present a problem matrix and therefore EMSL recommends gravimetric reduction prior to analysis. Samples received in good condition unless otherwise noted. Estimated accuracy, precision and uncertainty data available upon request.
Samples analyzed by EMSL Analytical, Inc. Phoenix, AZ NVLAP Lab Code 200811-0, AZ0937

Initial report from 02/13/2012 16:36:42

EMSL Analytical, Inc.
3356 West Catalina Drive, Phoenix, AZ 85017
Phone/Fax: (602) 276-4344 / (602) 276-4053
www.emsl.com phoenixlab@emsl.com

EMSL Order:	121200554
CustomerID:	32BAIN21
CustomerPO:	
ProjectID:	

Attn: **Dan Maiha**
Bainbridge Environmental Consultants
2670 North Main Street
Suite 320
Santa Ana, CA 92705

Phone:	(714) 247-0024
Fax:	(714) 247-0025
Received:	02/13/12 10:00 AM
Analysis Date:	2/13/2012
Collected:	

Project: **Muir ES Building 6**

Test Report: Asbestos Analysis of Bulk Materials via EPA 600/R-93/116 and/or EPA 600/M4-82-020 Method(s) using Polarized Light Microscopy

Sample	Description	Appearance	Non-Asbestos % Fibrous	Non-Asbestos % Non-Fibrous	Asbestos % Type
10-Adhesive *121200554-0010A*	4" Rubber Basecove W Adhesive/Brown - Classroom 107 Wall	Tan Non-Fibrous Homogeneous		100% Non-fibrous (other)	**None Detected**
11 *121200554-0011*	Gypsum Board - Classroom 112B Interior Wall Panel	Brown/White Non-Fibrous Heterogeneous	5% Cellulose	95% Non-fibrous (other)	**None Detected**
12 *121200554-0012*	Gypsum Board - Classroom 108 Interior Wall Panel	White Non-Fibrous Homogeneous	3% Cellulose 2% Glass	5% Non-fibrous (other) 90% Gypsum	**None Detected**
13 *121200554-0013*	Gypsum Board - Classroom 110 Interior Wall Panel	White Fibrous Homogeneous	10% Cellulose	90% Non-fibrous (other)	**None Detected**
14 *121200554-0014*	Vinyl Sheet Flooring/Yellow - Classroom 112B-Breezeway	Gray/Yellow Fibrous Heterogeneous	5% Cellulose	80% Non-fibrous (other)	**15% Chrysotile**
15 *121200554-0015*	Vinyl Sheet Flooring/White - Classroom 112B Floor	Gray/Beige Fibrous Heterogeneous	15% Cellulose 2% Glass	83% Non-fibrous (other)	**None Detected**

Analyst(s)

Amanda Lang (27)
Carlos Rivadeneyra (22)

Michelle Wilson

Michelle Wilson, Laboratory Manager
or other approved signatory

EMSL maintains liability limited to cost of analysis. This report relates only to the samples reported and may not be reproduced, except in full, without written approval by EMSL. EMSL bears no responsibility for sample collection activities or analytical method limitations. Interpretation and use of test results are the responsibility of the client. This report must not be used by the client to claim product certification, approval, or endorsement by NVLAP, NIST or any agency of the federal government. Non-friable organically bound materials present a problem matrix and therefore EMSL recommends gravimetric reduction prior to analysis. Samples received in good condition unless otherwise noted. Estimated accuracy, precision and uncertainty data available upon request.
Samples analyzed by EMSL Analytical, Inc. Phoenix, AZ NVLAP Lab Code 200811-0, AZ0937

Initial report from 02/13/2012 16:36:42

EMSL Analytical, Inc.
3356 West Catalina Drive, Phoenix, AZ 85017
Phone/Fax: (602) 276-4344 / (602) 276-4053
www.emsl.com phoenixlab@emsl.com

EMSL Order:	121200554
CustomerID:	32BAIN21
CustomerPO:	
ProjectID:	

Attn: **Dan Maiha**
Bainbridge Environmental Consultants
2670 North Main Street
Suite 320
Santa Ana, CA 92705

Phone:	(714) 247-0024
Fax:	(714) 247-0025
Received:	02/13/12 10:00 AM
Analysis Date:	2/13/2012
Collected:	

Project: **Muir ES Building 6**

Test Report: Asbestos Analysis of Bulk Materials via EPA 600/R-93/116 and/or EPA 600/M4-82-020 Method(s) using Polarized Light Microscopy

Sample	Description	Appearance	Non-Asbestos %	Fibrous	Non-Asbestos %	Non-Fibrous	Asbestos % Type
16 *121200554-0016*	Fiberglass Blanket Insulation/Brown - Classroom 106 Plenum	Gray Fibrous Homogeneous	99%	Glass	1%	Non-fibrous (other)	**None Detected**
17-Floor Tile *121200554-0017*	12-Inch Floor Tile W Mastic/Brown - Classroom 111 Entryway Floor	White Non-Fibrous Homogeneous			100%	Non-fibrous (other)	**None Detected**
17-Mastic *121200554-0017A*	12-Inch Floor Tile W Mastic/Brown - Classroom 111 Entryway Floor	Tan Non-Fibrous Homogeneous			100%	Non-fibrous (other)	**None Detected**
18-Floor Tile *121200554-0018*	12-Inch Floor Tile W Mastic/Brown - Classroom 109 Floor	White Non-Fibrous Homogeneous			100%	Non-fibrous (other)	**None Detected**
18-Mastic *121200554-0018A*	12-Inch Floor Tile W Mastic/Brown - Classroom 109 Floor	Tan Non-Fibrous Homogeneous			100%	Non-fibrous (other)	**None Detected**
19-Floor Tile *121200554-0019*	12-Inch Floor Tile W Mastic/Brown - Classroom 107 Floor	White Non-Fibrous Homogeneous			100%	Non-fibrous (other)	**None Detected**

Analyst(s)

Amanda Lang (27)
Carlos Rivadeneyra (22)

Michelle Wilson

Michelle Wilson, Laboratory Manager
or other approved signatory

EMSL maintains liability limited to cost of analysis. This report relates only to the samples reported and may not be reproduced, except in full, without written approval by EMSL. EMSL bears no responsibility for sample collection activities or analytical method limitations. Interpretation and use of test results are the responsibility of the client. This report must not be used by the client to claim product certification, approval, or endorsement by NVLAP, NIST or any agency of the federal government. Non-friable organically bound materials present a problem matrix and therefore EMSL recommends gravimetric reduction prior to analysis. Samples received in good condition unless otherwise noted. Estimated accuracy, precision and uncertainty data available upon request.
Samples analyzed by EMSL Analytical, Inc. Phoenix, AZ NVLAP Lab Code 200811-0, AZ0937

Initial report from 02/13/2012 16:36:42

EMSL Analytical, Inc.
3356 West Catalina Drive, Phoenix, AZ 85017
Phone/Fax: (602) 276-4344 / (602) 276-4053
www.emsl.com phoenixlab@emsl.com

EMSL Order:	121200554
CustomerID:	32BAIN21
CustomerPO:	
ProjectID:	

Attn: **Dan Maiha**
Bainbridge Environmental Consultants
2670 North Main Street
Suite 320
Santa Ana, CA 92705

Phone:	(714) 247-0024
Fax:	(714) 247-0025
Received:	02/13/12 10:00 AM
Analysis Date:	2/13/2012
Collected:	

Project: **Muir ES Building 6**

Test Report: Asbestos Analysis of Bulk Materials via EPA 600/R-93/116 and/or EPA 600/M4-82-020 Method(s) using Polarized Light Microscopy

Sample	Description	Appearance	Non-Asbestos % Fibrous	Non-Asbestos % Non-Fibrous	Asbestos % Type
19-Mastic *121200554-0019A*	12-Inch Floor Tile W Mastic/Brown - Classroom 107 Floor	Tan Non-Fibrous Homogeneous		100% Non-fibrous (other)	**None Detected**
20 *121200554-0020*	2'x4' Ceiling Panel/White - Classroom 111 Ceiling	Gray Fibrous Homogeneous	60% Min. Wool 20% Cellulose	10% Non-fibrous (other) 10% Perlite	**None Detected**
21 *121200554-0021*	2'x4' Ceiling Panel/White - Classroom 109 Ceiling	Gray Fibrous Homogeneous	60% Min. Wool 20% Cellulose	10% Non-fibrous (other) 10% Perlite	**None Detected**
22 *121200554-0022*	2'x4' Ceiling Panel/White - Classroom 107 Ceiling	Gray Fibrous Homogeneous	60% Min. Wool 20% Cellulose	10% Non-fibrous (other) 10% Perlite	**None Detected**
23 *121200554-0023*	Terrazzo/Beige - Boys Restroom Wall	White Non-Fibrous Homogeneous		100% Non-fibrous (other)	**None Detected**
24 *121200554-0024*	Terrazzo Flooring/Dark Brown - Girls Restroom Floor	Various Non-Fibrous Heterogeneous		100% Non-fibrous (other)	**None Detected**

Analyst(s)

Amanda Lang (27)
Carlos Rivadeneyra (22)

Michelle Wilson

Michelle Wilson, Laboratory Manager
or other approved signatory

EMSL maintains liability limited to cost of analysis. This report relates only to the samples reported and may not be reproduced, except in full, without written approval by EMSL. EMSL bears no responsibility for sample collection activities or analytical method limitations. Interpretation and use of test results are the responsibility of the client. This report must not be used by the client to claim product certification, approval, or endorsement by NVLAP, NIST or any agency of the federal government. Non-friable organically bound materials present a problem matrix and therefore EMSL recommends gravimetric reduction prior to analysis. Samples received in good condition unless otherwise noted. Estimated accuracy, precision and uncertainty data available upon request.
Samples analyzed by EMSL Analytical, Inc. Phoenix, AZ NVLAP Lab Code 200811-0, AZ0937

Initial report from 02/13/2012 16:36:42

EMSL Analytical, Inc.
3356 West Catalina Drive, Phoenix, AZ 85017
Phone/Fax: (602) 276-4344 / (602) 276-4053
www.emsl.com phoenixlab@emsl.com

EMSL Order:	121200554
CustomerID:	32BAIN21
CustomerPO:	
ProjectID:	

Attn: **Dan Maiha**
Bainbridge Environmental Consultants
2670 North Main Street
Suite 320
Santa Ana, CA 92705

Phone:	(714) 247-0024
Fax:	(714) 247-0025
Received:	02/13/12 10:00 AM
Analysis Date:	2/13/2012
Collected:	

Project: **Muir ES Building 6**

Test Report: Asbestos Analysis of Bulk Materials via EPA 600/R-93/116 and/or EPA 600/M4-82-020 Method(s) using Polarized Light Microscopy

Sample	Description	Appearance	Non-Asbestos % Fibrous	Non-Asbestos % Non-Fibrous	Asbestos % Type
25 *121200554-0025*	Transite Window Panel - Classroom 112B Window Base/Transom	Gray Fibrous Homogeneous		90% Non-fibrous (other)	**10% Chrysotile**
26-Floor Tile *121200554-0026*	Vinyl Tile (VAT) W Mastic/Off-White - Classroom 112B Floor Beneath Carpet	White Non-Fibrous Homogeneous		100% Non-fibrous (other)	**<1% Chrysotile**
26-Mastic *121200554-0026A*	Vinyl Tile (VAT) W Mastic/Off-White - Classroom 112B Floor Beneath Carpet	Black Non-Fibrous Homogeneous		93% Non-fibrous (other)	**7% Chrysotile**
27-Floor Tile *121200554-0027*	Vinyl Tile (VAT) W Mastic/Off-White - Classroom 112B Floor Beneath Carpet	White Non-Fibrous Homogeneous		100% Non-fibrous (other)	**<1% Chrysotile**
27-Mastic *121200554-0027A*	Vinyl Tile (VAT) W Mastic/Off-White - Classroom 112B Floor Beneath Carpet	Black Non-Fibrous Homogeneous		93% Non-fibrous (other)	**7% Chrysotile**

Analyst(s)

Amanda Lang (27)
Carlos Rivadeneyra (22)

Michelle Wilson

Michelle Wilson, Laboratory Manager
or other approved signatory

EMSL maintains liability limited to cost of analysis. This report relates only to the samples reported and may not be reproduced, except in full, without written approval by EMSL. EMSL bears no responsibility for sample collection activities or analytical method limitations. Interpretation and use of test results are the responsibility of the client. This report must not be used by the client to claim product certification, approval, or endorsement by NVLAP, NIST or any agency of the federal government. Non-friable organically bound materials present a problem matrix and therefore EMSL recommends gravimetric reduction prior to analysis. Samples received in good condition unless otherwise noted. Estimated accuracy, precision and uncertainty data available upon request.
Samples analyzed by EMSL Analytical, Inc. Phoenix, AZ NVLAP Lab Code 200811-0, AZ0937

Initial report from 02/13/2012 16:36:42

EMSL Analytical, Inc.
3356 West Catalina Drive, Phoenix, AZ 85017
Phone/Fax: (602) 276-4344 / (602) 276-4053
www.emsl.com phoenixlab@emsl.com

EMSL Order:	121200554
CustomerID:	32BAIN21
CustomerPO:	
ProjectID:	

Attn: **Dan Maiha**
Bainbridge Environmental Consultants
2670 North Main Street
Suite 320
Santa Ana, CA 92705

Phone:	(714) 247-0024
Fax:	(714) 247-0025
Received:	02/13/12 10:00 AM
Analysis Date:	2/13/2012
Collected:	

Project: **Muir ES Building 6**

Test Report: Asbestos Analysis of Bulk Materials via EPA 600/R-93/116 and/or EPA 600/M4-82-020 Method(s) using Polarized Light Microscopy

Sample	Description	Appearance	Non-Asbestos % Fibrous	Non-Asbestos % Non-Fibrous	Asbestos % Type
28-Floor Tile *121200554-0028*	Vinyl Tile (VAT) W Mastic/Off-White - Classroom 112B Floor Beneath Carpet	White Non-Fibrous Homogeneous		100% Non-fibrous (other)	**<1% Chrysotile**
28-Mastic *121200554-0028A*	Vinyl Tile (VAT) W Mastic/Off-White - Classroom 112B Floor Beneath Carpet	Black Non-Fibrous Homogeneous		93% Non-fibrous (other)	**7% Chrysotile**
29 *121200554-0029*	Plaster/Gray - Classroom 112B Boys Restroom Wall	Gray Non-Fibrous Homogeneous		100% Non-fibrous (other)	**None Detected**
30 *121200554-0030*	Plaster/Gray - Classroom 112B Boys Restroom Wall	Gray Non-Fibrous Homogeneous		100% Non-fibrous (other)	**None Detected**
31 *121200554-0031*	Plaster/Gray - Classroom 112B Girls Restroom Wall	Gray Non-Fibrous Homogeneous		100% Non-fibrous (other)	**None Detected**
32 *121200554-0032*	(Silver) Paint - Rooftop At Surface-North	Silver Non-Fibrous Homogeneous		100% Non-fibrous (other)	**None Detected**

Analyst(s)

Amanda Lang (27)
Carlos Rivadeneyra (22)

Michelle Wilson

Michelle Wilson, Laboratory Manager
or other approved signatory

EMSL maintains liability limited to cost of analysis. This report relates only to the samples reported and may not be reproduced, except in full, without written approval by EMSL. EMSL bears no responsibility for sample collection activities or analytical method limitations. Interpretation and use of test results are the responsibility of the client. This report must not be used by the client to claim product certification, approval, or endorsement by NVLAP, NIST or any agency of the federal government. Non-friable organically bound materials present a problem matrix and therefore EMSL recommends gravimetric reduction prior to analysis. Samples received in good condition unless otherwise noted. Estimated accuracy, precision and uncertainty data available upon request.
Samples analyzed by EMSL Analytical, Inc. Phoenix, AZ NVLAP Lab Code 200811-0, AZ0937

Initial report from 02/13/2012 16:36:42

EMSL Analytical, Inc.
3356 West Catalina Drive, Phoenix, AZ 85017
Phone/Fax: (602) 276-4344 / (602) 276-4053
www.emsl.com phoenixlab@emsl.com

EMSL Order:	121200554
CustomerID:	32BAIN21
CustomerPO:	
ProjectID:	

Attn: **Dan Maiha**
Bainbridge Environmental Consultants
2670 North Main Street
Suite 320
Santa Ana, CA 92705

Phone:	(714) 247-0024
Fax:	(714) 247-0025
Received:	02/13/12 10:00 AM
Analysis Date:	2/13/2012
Collected:	

Project: **Muir ES Building 6**

Test Report: Asbestos Analysis of Bulk Materials via EPA 600/R-93/116 and/or EPA 600/M4-82-020 Method(s) using Polarized Light Microscopy

Sample	Description	Appearance	Non-Asbestos %	Fibrous	Non-Asbestos %	Non-Fibrous	Asbestos % Type
33 *121200554-0033*	T/G Rolled Roofing/Black - Rooftop At Surface-North	Black Fibrous Homogeneous	20%	Glass	80%	Non-fibrous (other)	**None Detected**
34 *121200554-0034*	(Silver) Paint - Rooftop At Surface-West	Silver Non-Fibrous Homogeneous			100%	Non-fibrous (other)	**None Detected**
35 *121200554-0035*	T/G Rolled Roofing/Black - Rooftop At Surface-West	Black Fibrous Homogeneous	20%	Glass	80%	Non-fibrous (other)	**None Detected**
36 *121200554-0036*	(Silver) Paint - Rooftop At Surface-East	Silver Non-Fibrous Homogeneous			100%	Non-fibrous (other)	**None Detected**
37 *121200554-0037*	T/G Rolled Roofing/Black - Rooftop At Surface-East	Black Fibrous Homogeneous	20%	Glass	80%	Non-fibrous (other)	**None Detected**
38 *121200554-0038*	Roof Penetration Mastic/Black - Rooftop At HVAC Penetration-West	White/Black/Silver Fibrous Homogeneous	30%	Cellulose	70%	Non-fibrous (other)	**None Detected**

Analyst(s)

Amanda Lang (27)
Carlos Rivadeneyra (22)

Michelle Wilson

Michelle Wilson, Laboratory Manager
or other approved signatory

EMSL maintains liability limited to cost of analysis. This report relates only to the samples reported and may not be reproduced, except in full, without written approval by EMSL. EMSL bears no responsibility for sample collection activities or analytical method limitations. Interpretation and use of test results are the responsibility of the client. This report must not be used by the client to claim product certification, approval, or endorsement by NVLAP, NIST or any agency of the federal government. Non-friable organically bound materials present a problem matrix and therefore EMSL recommends gravimetric reduction prior to analysis. Samples received in good condition unless otherwise noted. Estimated accuracy, precision and uncertainty data available upon request.
Samples analyzed by EMSL Analytical, Inc. Phoenix, AZ NVLAP Lab Code 200811-0, AZ0937

Initial report from 02/13/2012 16:36:42

EMSL Analytical, Inc.
3356 West Catalina Drive, Phoenix, AZ 85017
Phone/Fax: (602) 276-4344 / (602) 276-4053
www.emsl.com phoenixlab@emsl.com

EMSL Order:	121200554
CustomerID:	32BAIN21
CustomerPO:	
ProjectID:	

Attn: **Dan Maiha**
Bainbridge Environmental Consultants
2670 North Main Street
Suite 320
Santa Ana, CA 92705

Phone:	(714) 247-0024
Fax:	(714) 247-0025
Received:	02/13/12 10:00 AM
Analysis Date:	2/13/2012
Collected:	

Project: **Muir ES Building 6**

Test Report: Asbestos Analysis of Bulk Materials via EPA 600/R-93/116 and/or EPA 600/M4-82-020 Method(s) using Polarized Light Microscopy

			Non-Asbestos				Asbestos
Sample	**Description**	**Appearance**	**%**	**Fibrous**	**%**	**Non-Fibrous**	**% Type**
39 *121200554-0039*	Roof Penetration Mastic/Black - Rooftop At Pipe Penetration-North	White/Black Fibrous Homogeneous	30%	Cellulose	70%	Non-fibrous (other)	**None Detected**
40 *121200554-0040*	Roof Penetration Mastic/Black - Rooftop At Pipe Penetration-East	White/Black Fibrous Homogeneous	30%	Cellulose	70%	Non-fibrous (other)	**None Detected**

Analyst(s)

Amanda Lang (27)
Carlos Rivadeneyra (22)

Michelle Wilson

Michelle Wilson, Laboratory Manager
or other approved signatory

EMSL maintains liability limited to cost of analysis. This report relates only to the samples reported and may not be reproduced, except in full, without written approval by EMSL. EMSL bears no responsibility for sample collection activities or analytical method limitations. Interpretation and use of test results are the responsibility of the client. This report must not be used by the client to claim product certification, approval, or endorsement by NVLAP, NIST or any agency of the federal government. Non-friable organically bound materials present a problem matrix and therefore EMSL recommends gravimetric reduction prior to analysis. Samples received in good condition unless otherwise noted. Estimated accuracy, precision and uncertainty data available upon request.
Samples analyzed by EMSL Analytical, Inc. Phoenix, AZ NVLAP Lab Code 200811-0, AZ0937

Initial report from 02/13/2012 16:36:42

THIS IS THE LAST PAGE OF THE REPORT.

ASBESTOS BULK SAMPLE

Client: SAUSD
Project Name: Muir ES Building 7
Address: 1951 Mabury Street
Santa Ana, CA 92705

BEC Project Number: 12014043.10
Inspector/Sampler: D. Mai Ha/K. Cisco
Date Sampled: 2/9/2012

BAINBRIDGE
Environmental Consultants

Sample Number	Building	Sample Location	Sample Description/Color	Material Location	Approx. Quantity	Results
1a	Building 7	Exterior Wall-North	Stucco/Beige – Skim Coat/Olive	Exterior Walls Throughout	10,000sf	<1% Chrysotile
1b	Building 7	Exterior Wall-North	Stucco/Beige – Base Coat/Gray		-	None Detected
2a	Building 7	Exterior Wall-Northeast	Stucco/Beige – Skim Coat/Olive		10,000sf	<1% Chrysotile
2b	Building 7	Exterior Wall-Northeast	Stucco/Beige – Base Coat/Gray		-	None Detected
3a	Building 7	Exterior Wall-East	Stucco/Beige – Skim Coat/Olive		10,000sf	<1% Chrysotile
3b	Building 7	Exterior Wall-East	Stucco/Beige – Base Coat/Gray		-	None Detected
4a	Building 7	Exterior Wall-South	Stucco/Beige – Skim Coat/Olive		10,000sf	<1% Chrysotile
4b	Building 7	Exterior Wall-South	Stucco/Beige – Base Coat/Gray		-	None Detected
5a	Building 7	Exterior Wall-Southwest	Stucco/Beige – Skim Coat/Olive		10,000sf	<1% Chrysotile
5b	Building 7	Exterior Wall-Southwest	Stucco/Beige – Base Coat/Gray		-	None Detected
6a	Building 7	Exterior Wall-West	Stucco/Beige – Skim Coat/Olive		10,000sf	<1% Chrysotile
6b	Building 7	Exterior Wall-West	Stucco/Beige – Base Coat/Gray		-	None Detected
7	Building 7	Exterior Wall-West	Stucco/Beige – Skim Coat/Olive		-	None Detected
8a	Building 7	Rm. 122 Wall	4" Rubber Basecove/Brown	Basecoves Throughout	-	None Detected
8b	Building 7	Rm. 122 Wall	4" Rubber Basecove w Adhesive/White		-	None Detected
8c	Building 7	Rm. 122 Wall	4" Rubber Basecove w Adhesive/Brown		2,400lf	2% Anthophyllite

2670 North Main Street, Suite 320
Santa Ana, CA 92705

(714) 247-0024
Fax (714) 247-0025

ASBESTOS BULK SAMPLE

SAUSD – Muir Elementary School

BAINBRIDGE
Environmental Consultants

Sample Number	Building	Sample Location	Sample Description/Color	Material Location	Approx. Quantity	Results
9	Building 7	Rm. 129 Wall	4" Rubber Basecove w Adhesive/Gray	Basecoves Throughout	-	None Detected
10	Building 7	Storage/Room 131 Wall	4" Rubber Basecove w Adhesive/Gray		-	None Detected
11	Building 7	Room 122 Ceiling	2' x 4' Ceiling Panel/White	Classroom Drop Ceilings Throughout	-	None Detected
12	Building 7	Room 125 Ceiling	2' x 4' Ceiling Panel/White		-	None Detected
13	Building 7	Room 128 Ceiling	2' x 4' Ceiling Panel/White		-	None Detected
14	Building 7	Storage/Room 131 Wall	12-inch Floor Tile w Mastic/Gray	12-inch Floor Tiles Throughout	-	None Detected
15a	Building 7	Room 124	12-inch Floor Tile/Gray		-	None Detected
15b	Building 7	Room 124	12-inch Floor Tile Mastic/Tan		-	None Detected
15c	Building 7	Room 124	12-inch Floor Tile Mastic/Black		800sf	15% Chrysotile
16a	Building 7	Room 128	12-inch Floor Tile/Gray		-	None Detected
16b	Building 7	Room 128	12-inch Floor Tile Mastic/Tan		-	None Detected
16c	Building 7	Room 128	12-inch Floor Tile Mastic/Black		800sf	15% Chrysotile
17a	Building 7	Room 131/Storage Room Walls	Plaster/Gray – Skim Coat/Gray	Walls & Ceilings Throughout	3,000sf	<1% Chrysotile
17b	Building 7	Room 131/Storage Room Walls	Plaster/Gray – Base Coat/Beige		-	None Detected
18	Building 7	Room 131/Storage Room Walls	Plaster/Gray		-	None Detected
19	Building 7	Janitor Room Wall	Plaster/Gray		-	None Detected
20	Building 7	Rooftop at Surface-North	(Silver) Paint	Roofing Throughout	-	None Detected

2670 North Main Street, Suite 320
Santa Ana, CA 92705

(714) 247-0024
Fax (714) 247-0025

ASBESTOS BULK SAMPLE

SAUSD – Muir Elementary School

BAINBRIDGE
Environmental Consultants

Sample Number	Building	Sample Location	Sample Description/Color	Material Location	Approx. Quantity	Results
21	Building 7	Rooftop at Surface-North	T/G Rolled Roofing/Black	Roofing Throughout	-	None Detected
22	Building 7	Rooftop at Surface-East	(Silver) Paint		-	None Detected
23	Building 7	Rooftop at Surface-East	T/G Rolled Roofing/Black		-	None Detected
24	Building 7	Rooftop at Surface-West	(Silver) Paint		-	None Detected
25	Building 7	Rooftop at Surface-West	T/G Rolled Roofing/Black		-	None Detected
26	Building 7	Rooftop at HVAC Penetration-West	Roof Penetration Mastic/Black	Roof Penetration Mastic Throughout	-	None Detected
27	Building 7	Rooftop at Pipe Penetration-West	Roof Penetration Mastic/Black		400sf	<1% Chrysotile
28	Building 7	Rooftop at Pipe Penetration-East	Roof Penetration Mastic/Black			<1% Chrysotile
--	Building 7	Inaccessible	Fire Doors	Throughout Building	--	Assumed

2670 North Main Street, Suite 320
Santa Ana, CA 92705

(714) 247-0024
Fax (714) 247-0025

EMSL Analytical, Inc.
3356 West Catalina Drive, Phoenix, AZ 85017
Phone/Fax: (602) 276-4344 / (602) 276-4053
www.emsl.com phoenixlab@emsl.com

EMSL Order:	121200559
CustomerID:	32BAIN21
CustomerPO:	
ProjectID:	

Attn: **Dan Maiha**
Bainbridge Environmental Consultants
2670 North Main Street
Suite 320
Santa Ana, CA 92705

Phone:	(714) 247-0024
Fax:	(714) 247-0025
Received:	02/13/12 10:00 AM
Analysis Date:	2/14/2012
Collected:	

Project: **Muir ES Building 7**

Test Report: Asbestos Analysis of Bulk Materials via EPA 600/R-93/116 and/or EPA 600/M4-82-020 Method(s) using Polarized Light Microscopy

Sample	Description	Appearance	Non-Asbestos % Fibrous	Non-Asbestos % Non-Fibrous	Asbestos % Type
1-Skim Coat *121200559-0001*	Stucco/Beige - Exterior Wall-North	Olive Non-Fibrous Homogeneous		100% Non-fibrous (other)	**<1% Chrysotile**
1-Base Coat *121200559-0001A*	Stucco/Beige - Exterior Wall-North	Gray Non-Fibrous Homogeneous		100% Non-fibrous (other)	**None Detected**
2-Skim Coat *121200559-0002*	Stucco/Beige - Exterior Wall-Northeast	Olive Non-Fibrous Homogeneous		100% Non-fibrous (other)	**<1% Chrysotile**
2-Base Coat *121200559-0002A*	Stucco/Beige - Exterior Wall-Northeast	Gray Non-Fibrous Homogeneous		100% Non-fibrous (other)	**None Detected**
3-Skim Coat *121200559-0003*	Stucco/Beige - Exterior Wall-East	Olive Non-Fibrous Homogeneous		100% Non-fibrous (other)	**<1% Chrysotile**
3-Base Coat *121200559-0003A*	Stucco/Beige - Exterior Wall-East	Gray Non-Fibrous Homogeneous		100% Non-fibrous (other)	**None Detected**
4-Skim Coat *121200559-0004*	Stucco/Beige - Exterior Wall-South	Olive Non-Fibrous Homogeneous		100% Non-fibrous (other)	**<1% Chrysotile**

Analyst(s)

Amanda Lang (6) *Mike J. Williams (34)*
Carlos Rivadeneyra (9)

Michelle Wilson
Michelle Wilson, Laboratory Manager
or other approved signatory

EMSL maintains liability limited to cost of analysis. This report relates only to the samples reported and may not be reproduced, except in full, without written approval by EMSL. EMSL bears no responsibility for sample collection activities or analytical method limitations. Interpretation and use of test results are the responsibility of the client. This report must not be used by the client to claim product certification, approval, or endorsement by NVLAP, NIST or any agency of the federal government. Non-friable organically bound materials present a problem matrix and therefore EMSL recommends gravimetric reduction prior to analysis. Samples received in good condition unless otherwise noted. Estimated accuracy, precision and uncertainty data available upon request.
Samples analyzed by EMSL Analytical, Inc. Phoenix, AZ NVLAP Lab Code 200811-0, AZ0937

Initial report from 02/14/2012 09:57:46

EMSL Analytical, Inc.
3356 West Catalina Drive, Phoenix, AZ 85017
Phone/Fax: (602) 276-4344 / (602) 276-4053
www.emsl.com phoenixlab@emsl.com

EMSL Order:	121200559
CustomerID:	32BAIN21
CustomerPO:	
ProjectID:	

Attn: **Dan Maiha**
Bainbridge Environmental Consultants
2670 North Main Street
Suite 320
Santa Ana, CA 92705

Phone:	(714) 247-0024
Fax:	(714) 247-0025
Received:	02/13/12 10:00 AM
Analysis Date:	2/14/2012
Collected:	

Project: **Muir ES Building 7**

Test Report: Asbestos Analysis of Bulk Materials via EPA 600/R-93/116 and/or EPA 600/M4-82-020 Method(s) using Polarized Light Microscopy

Sample	Description	Appearance	Non-Asbestos % Fibrous	Non-Asbestos % Non-Fibrous	Asbestos % Type
4-Base Coat *121200559-0004A*	Stucco/Beige - Exterior Wall-South	Gray Non-Fibrous Homogeneous		100% Non-fibrous (other)	**None Detected**
5-Skim Coat *121200559-0005*	Stucco/Beige - Exterior Wall-Southwest	Olive Non-Fibrous Homogeneous		100% Non-fibrous (other)	**<1% Chrysotile**
5-Base Coat *121200559-0005A*	Stucco/Beige - Exterior Wall-Southwest	Gray Non-Fibrous Homogeneous		100% Non-fibrous (other)	**None Detected**
6-Skim Coat *121200559-0006*	Stucco/Beige - Exterior Wall-West	Beige Non-Fibrous Homogeneous		100% Non-fibrous (other)	**<1% Chrysotile**
6-Base Coat *121200559-0006A*	Stucco/Beige - Exterior Wall-West	Gray Non-Fibrous Homogeneous		100% Non-fibrous (other)	**None Detected**
7-Base Coat *121200559-0007*	Stucco/Beige - Exterior Wall-West	Gray Non-Fibrous Homogeneous		100% Non-fibrous (other)	**None Detected**
8-Basecove *121200559-0008*	4" Rubber Basecove W Adhesive/Gray - Rm. 122 Wall	Brown Non-Fibrous Homogeneous		100% Non-fibrous (other)	**None Detected**

Analyst(s)

Amanda Lang (6) *Mike J. Williams (34)*
Carlos Rivadeneyra (9)

Michelle Wilson

Michelle Wilson, Laboratory Manager
or other approved signatory

EMSL maintains liability limited to cost of analysis. This report relates only to the samples reported and may not be reproduced, except in full, without written approval by EMSL. EMSL bears no responsibility for sample collection activities or analytical method limitations. Interpretation and use of test results are the responsibility of the client. This report must not be used by the client to claim product certification, approval, or endorsement by NVLAP, NIST or any agency of the federal government. Non-friable organically bound materials present a problem matrix and therefore EMSL recommends gravimetric reduction prior to analysis. Samples received in good condition unless otherwise noted. Estimated accuracy, precision and uncertainty data available upon request.
Samples analyzed by EMSL Analytical, Inc. Phoenix, AZ NVLAP Lab Code 200811-0, AZ0937

Initial report from 02/14/2012 09:57:46

EMSL Analytical, Inc.
3356 West Catalina Drive, Phoenix, AZ 85017
Phone/Fax: (602) 276-4344 / (602) 276-4053
www.emsl.com phoenixlab@emsl.com

EMSL Order:	121200559
CustomerID:	32BAIN21
CustomerPO:	
ProjectID:	

Attn: **Dan Maiha**
Bainbridge Environmental Consultants
2670 North Main Street
Suite 320
Santa Ana, CA 92705

Phone:	(714) 247-0024
Fax:	(714) 247-0025
Received:	02/13/12 10:00 AM
Analysis Date:	2/14/2012
Collected:	

Project: **Muir ES Building 7**

Test Report: Asbestos Analysis of Bulk Materials via EPA 600/R-93/116 and/or EPA 600/M4-82-020 Method(s) using Polarized Light Microscopy

Sample	Description	Appearance	Non-Asbestos % Fibrous	Non-Asbestos % Non-Fibrous	Asbestos % Type
8-White Adhesive *121200559-0008A*	4" Rubber Basecove W Adhesive/Gray - Rm. 122 Wall	White Non-Fibrous Homogeneous		100% Non-fibrous (other)	**None Detected**
8-Brown Adhesive *121200559-0008B*	4" Rubber Basecove W Adhesive/Gray - Rm. 122 Wall	Brown Non-Fibrous Homogeneous		98% Non-fibrous (other)	**2% Anthophyllite**
9-Basecove *121200559-0009*	4" Rubber Basecove W Adhesive/Gray - Rm. 129 Wall	Brown Non-Fibrous Homogeneous		100% Non-fibrous (other)	**None Detected**
9-Adhesive *121200559-0009A*	4" Rubber Basecove W Adhesive/Gray - Rm. 129 Wall	White Non-Fibrous Homogeneous		100% Non-fibrous (other)	**None Detected**
10-Basecove *121200559-0010*	4" Rubber Basecove W Adhesive/Gray - Storage/Room 131 Wall	Brown Non-Fibrous Homogeneous		100% Non-fibrous (other)	**None Detected**
10-Adhesive *121200559-0010A*	4" Rubber Basecove W Adhesive/Gray - Storage/Room 131 Wall	White Non-Fibrous Homogeneous		100% Non-fibrous (other)	**None Detected**

Analyst(s)

Amanda Lang (6) *Mike J. Williams (34)*
Carlos Rivadeneyra (9)

Michelle Wilson

Michelle Wilson, Laboratory Manager
or other approved signatory

EMSL maintains liability limited to cost of analysis. This report relates only to the samples reported and may not be reproduced, except in full, without written approval by EMSL. EMSL bears no responsibility for sample collection activities or analytical method limitations. Interpretation and use of test results are the responsibility of the client. This report must not be used by the client to claim product certification, approval, or endorsement by NVLAP, NIST or any agency of the federal government. Non-friable organically bound materials present a problem matrix and therefore EMSL recommends gravimetric reduction prior to analysis. Samples received in good condition unless otherwise noted. Estimated accuracy, precision and uncertainty data available upon request.
Samples analyzed by EMSL Analytical, Inc. Phoenix, AZ NVLAP Lab Code 200811-0, AZ0937

Initial report from 02/14/2012 09:57:46

EMSL Analytical, Inc.
3356 West Catalina Drive, Phoenix, AZ 85017
Phone/Fax: (602) 276-4344 / (602) 276-4053
www.emsl.com phoenixlab@emsl.com

EMSL Order:	121200559
CustomerID:	32BAIN21
CustomerPO:	
ProjectID:	

Attn: **Dan Maiha**
Bainbridge Environmental Consultants
2670 North Main Street
Suite 320
Santa Ana, CA 92705

Phone:	(714) 247-0024
Fax:	(714) 247-0025
Received:	02/13/12 10:00 AM
Analysis Date:	2/14/2012
Collected:	

Project: **Muir ES Building 7**

Test Report: Asbestos Analysis of Bulk Materials via EPA 600/R-93/116 and/or EPA 600/M4-82-020 Method(s) using Polarized Light Microscopy

Sample	Description	Appearance	Non-Asbestos % Fibrous	Non-Asbestos % Non-Fibrous	Asbestos % Type
11 *121200559-0011*	2'x4' Ceiling Panel/White - Room 122 Ceiling	Gray Fibrous Homogeneous	50% Min. Wool 30% Cellulose	10% Non-fibrous (other) 10% Perlite	**None Detected**
12 *121200559-0012*	2'x4' Ceiling Panel/White - Room 125 Ceiling	Gray Fibrous Homogeneous	50% Min. Wool 30% Cellulose	10% Non-fibrous (other) 10% Perlite	**None Detected**
13 *121200559-0013*	2'x4' Ceiling Panel/White - Room 128 Ceiling	Gray Fibrous Homogeneous	50% Min. Wool 30% Cellulose	10% Non-fibrous (other) 10% Perlite	**None Detected**
14-Floor Tile *121200559-0014*	12-Inch Floor Tile W Mastic/Gray - Storage/Room 131 Wall	Gray Non-Fibrous Homogeneous		100% Non-fibrous (other)	**None Detected**
14-Mastic *121200559-0014A*	12-Inch Floor Tile W Mastic/Gray - Storage/Room 131 Wall	Tan Non-Fibrous Homogeneous		100% Non-fibrous (other)	**None Detected**
15-Floor Tile *121200559-0015*	12-Inch Floor Tile W Mastic/Gray - Room 124	Gray Non-Fibrous Homogeneous		100% Non-fibrous (other)	**None Detected**
15-Tan Mastic *121200559-0015A*	12-Inch Floor Tile W Mastic/Gray - Room 124	Tan Non-Fibrous Homogeneous		100% Non-fibrous (other)	**None Detected**

Analyst(s)

Amanda Lang (6) *Mike J. Williams (34)*
Carlos Rivadeneyra (9)

Michelle Wilson
Michelle Wilson, Laboratory Manager
or other approved signatory

EMSL maintains liability limited to cost of analysis. This report relates only to the samples reported and may not be reproduced, except in full, without written approval by EMSL. EMSL bears no responsibility for sample collection activities or analytical method limitations. Interpretation and use of test results are the responsibility of the client. This report must not be used by the client to claim product certification, approval, or endorsement by NVLAP, NIST or any agency of the federal government. Non-friable organically bound materials present a problem matrix and therefore EMSL recommends gravimetric reduction prior to analysis. Samples received in good condition unless otherwise noted. Estimated accuracy, precision and uncertainty data available upon request.
Samples analyzed by EMSL Analytical, Inc. Phoenix, AZ NVLAP Lab Code 200811-0, AZ0937

Initial report from 02/14/2012 09:57:46

EMSL Analytical, Inc.
3356 West Catalina Drive, Phoenix, AZ 85017
Phone/Fax: (602) 276-4344 / (602) 276-4053
www.emsl.com phoenixlab@emsl.com

EMSL Order:	121200559
CustomerID:	32BAIN21
CustomerPO:	
ProjectID:	

Attn: **Dan Maiha**
Bainbridge Environmental Consultants
2670 North Main Street
Suite 320
Santa Ana, CA 92705

Phone:	(714) 247-0024
Fax:	(714) 247-0025
Received:	02/13/12 10:00 AM
Analysis Date:	2/14/2012
Collected:	

Project: **Muir ES Building 7**

Test Report: Asbestos Analysis of Bulk Materials via EPA 600/R-93/116 and/or EPA 600/M4-82-020 Method(s) using Polarized Light Microscopy

Sample	Description	Appearance	Non-Asbestos % Fibrous	Non-Asbestos % Non-Fibrous	Asbestos % Type
15-Black Mastic *121200559-0015B*	12-Inch Floor Tile W Mastic/Gray - Room 124	Black Non-Fibrous Homogeneous		85% Non-fibrous (other)	**15% Chrysotile**
16-Floor Tile *121200559-0016*	12-Inch Floor Tile W Mastic/Gray - Room 128	Gray Non-Fibrous Homogeneous		100% Non-fibrous (other)	**None Detected**
16-Tan Mastic *121200559-0016A*	12-Inch Floor Tile W Mastic/Gray - Room 128	Tan Non-Fibrous Homogeneous		100% Non-fibrous (other)	**None Detected**
16-Black Mastic *121200559-0016B*	12-Inch Floor Tile W Mastic/Gray - Room 128	Black Non-Fibrous Homogeneous		85% Non-fibrous (other)	**15% Chrysotile**
17-Skim Coat *121200559-0017*	Plaster/Gray - Room 131/Storage Room Walls	Gray Non-Fibrous Homogeneous		100% Non-fibrous (other)	**<1% Chrysotile**
17-Base Coat *121200559-0017A*	Plaster/Gray - Room 131/Storage Room Walls	Beige Non-Fibrous Homogeneous		100% Non-fibrous (other)	**None Detected**
18-Skim Coat *121200559-0018*	Plaster/Gray - Room 131/Storage Room Walls	Gray Non-Fibrous Homogeneous		100% Non-fibrous (other)	**None Detected**

Analyst(s)

Amanda Lang (6) *Mike J. Williams (34)*
Carlos Rivadeneyra (9)

Michelle Wilson

Michelle Wilson, Laboratory Manager
or other approved signatory

EMSL maintains liability limited to cost of analysis. This report relates only to the samples reported and may not be reproduced, except in full, without written approval by EMSL. EMSL bears no responsibility for sample collection activities or analytical method limitations. Interpretation and use of test results are the responsibility of the client. This report must not be used by the client to claim product certification, approval, or endorsement by NVLAP, NIST or any agency of the federal government. Non-friable organically bound materials present a problem matrix and therefore EMSL recommends gravimetric reduction prior to analysis. Samples received in good condition unless otherwise noted. Estimated accuracy, precision and uncertainty data available upon request.
Samples analyzed by EMSL Analytical, Inc. Phoenix, AZ NVLAP Lab Code 200811-0, AZ0937

Initial report from 02/14/2012 09:57:46

EMSL Analytical, Inc.
3356 West Catalina Drive, Phoenix, AZ 85017
Phone/Fax: (602) 276-4344 / (602) 276-4053
www.emsl.com phoenixlab@emsl.com

EMSL Order:	121200559
CustomerID:	32BAIN21
CustomerPO:	
ProjectID:	

Attn: **Dan Maiha**
Bainbridge Environmental Consultants
2670 North Main Street
Suite 320
Santa Ana, CA 92705

Phone:	(714) 247-0024
Fax:	(714) 247-0025
Received:	02/13/12 10:00 AM
Analysis Date:	2/14/2012
Collected:	

Project: **Muir ES Building 7**

Test Report: Asbestos Analysis of Bulk Materials via EPA 600/R-93/116 and/or EPA 600/M4-82-020 Method(s) using Polarized Light Microscopy

Sample	Description	Appearance	Non-Asbestos % Fibrous	Non-Asbestos % Non-Fibrous	Asbestos % Type
18-Base Coat *121200559-0018A*	Plaster/Gray - Room 131/Storage Room Walls	Beige Non-Fibrous Homogeneous		100% Non-fibrous (other)	**None Detected**
19-Skim Coat *121200559-0019*	Plaster/Gray - Janitor Room Wall	Gray Non-Fibrous Homogeneous		100% Non-fibrous (other)	**None Detected**
19-Base Coat *121200559-0019A*	Plaster/Gray - Janitor Room Wall	Beige Non-Fibrous Homogeneous		100% Non-fibrous (other)	**None Detected**
20 *121200559-0020*	(Silver) Paint - Rooftop At Surface-North	Silver Non-Fibrous Homogeneous		100% Non-fibrous (other)	**None Detected**
21-Roofing *121200559-0021*	T/G Rolled Roofing/Black - Rooftop At Surface-North	Black/Silver Fibrous Heterogeneous	10% Glass 2% Synthetic	88% Non-fibrous (other)	**None Detected**
21-Fiberboard *121200559-0021A*	T/G Rolled Roofing/Black - Rooftop At Surface-North	Brown Fibrous Homogeneous	100% Cellulose	0% Non-fibrous (other)	**None Detected**
22 *121200559-0022*	(Silver) Paint - Rooftop At Surface-East	Silver Non-Fibrous Homogeneous		100% Non-fibrous (other)	**None Detected**

Analyst(s)

Amanda Lang (6) *Mike J. Williams (34)*
Carlos Rivadeneyra (9)

Michelle Wilson
Michelle Wilson, Laboratory Manager
or other approved signatory

EMSL maintains liability limited to cost of analysis. This report relates only to the samples reported and may not be reproduced, except in full, without written approval by EMSL. EMSL bears no responsibility for sample collection activities or analytical method limitations. Interpretation and use of test results are the responsibility of the client. This report must not be used by the client to claim product certification, approval, or endorsement by NVLAP, NIST or any agency of the federal government. Non-friable organically bound materials present a problem matrix and therefore EMSL recommends gravimetric reduction prior to analysis. Samples received in good condition unless otherwise noted. Estimated accuracy, precision and uncertainty data available upon request.
Samples analyzed by EMSL Analytical, Inc. Phoenix, AZ NVLAP Lab Code 200811-0, AZ0937

Initial report from 02/14/2012 09:57:46

EMSL Analytical, Inc.
3356 West Catalina Drive, Phoenix, AZ 85017
Phone/Fax: (602) 276-4344 / (602) 276-4053
www.emsl.com phoenixlab@emsl.com

EMSL Order:	121200559
CustomerID:	32BAIN21
CustomerPO:	
ProjectID:	

Attn: **Dan Maiha**
Bainbridge Environmental Consultants
2670 North Main Street
Suite 320
Santa Ana, CA 92705

Phone:	(714) 247-0024
Fax:	(714) 247-0025
Received:	02/13/12 10:00 AM
Analysis Date:	2/14/2012
Collected:	

Project: **Muir ES Building 7**

Test Report: Asbestos Analysis of Bulk Materials via EPA 600/R-93/116 and/or EPA 600/M4-82-020 Method(s) using Polarized Light Microscopy

Sample	Description	Appearance	Non-Asbestos %	Fibrous	Non-Asbestos %	Non-Fibrous	Asbestos % Type
23-Roofing *121200559-0023*	T/G Rolled Roofing/Black - Rooftop At Surface-East	Black Fibrous Heterogeneous	10% 2%	Glass Synthetic	88%	Non-fibrous (other)	**None Detected**
23-Fiberboard *121200559-0023A*	T/G Rolled Roofing/Black - Rooftop At Surface-East	Brown Fibrous Homogeneous	100%	Cellulose	0%	Non-fibrous (other)	**None Detected**
24 *121200559-0024*	(Silver) Paint - Rooftop At Surface-West	Silver Non-Fibrous Homogeneous			100%	Non-fibrous (other)	**None Detected**
25-Shingle *121200559-0025*	T/G Rolled Roofing/Black - Rooftop At Surface-West	Black Fibrous Heterogeneous	10%	Glass	90%	Non-fibrous (other)	**None Detected**
25-Roofing *121200559-0025A*	T/G Rolled Roofing/Black - Rooftop At Surface-West	Black Fibrous Homogeneous	15% 5%	Glass Synthetic	80%	Non-fibrous (other)	**None Detected**
26 *121200559-0026*	Roof Penetration Mastic/Black - Rooftop At HVAC Penetration-West	Various Fibrous Heterogeneous	20% 2% <1%	Cellulose Glass Synthetic	78%	Non-fibrous (other)	**None Detected**

Analyst(s)

Amanda Lang (6) *Mike J. Williams (34)*
Carlos Rivadeneyra (9)

Michelle Wilson

Michelle Wilson, Laboratory Manager
or other approved signatory

EMSL maintains liability limited to cost of analysis. This report relates only to the samples reported and may not be reproduced, except in full, without written approval by EMSL. EMSL bears no responsibility for sample collection activities or analytical method limitations. Interpretation and use of test results are the responsibility of the client. This report must not be used by the client to claim product certification, approval, or endorsement by NVLAP, NIST or any agency of the federal government. Non-friable organically bound materials present a problem matrix and therefore EMSL recommends gravimetric reduction prior to analysis. Samples received in good condition unless otherwise noted. Estimated accuracy, precision and uncertainty data available upon request.
Samples analyzed by EMSL Analytical, Inc. Phoenix, AZ NVLAP Lab Code 200811-0, AZ0937

Initial report from 02/14/2012 09:57:46

EMSL Analytical, Inc.
3356 West Catalina Drive, Phoenix, AZ 85017
Phone/Fax: (602) 276-4344 / (602) 276-4053
www.emsl.com phoenixlab@emsl.com

EMSL Order:	121200559
CustomerID:	32BAIN21
CustomerPO:	
ProjectID:	

Attn: **Dan Maiha**
Bainbridge Environmental Consultants
2670 North Main Street
Suite 320
Santa Ana, CA 92705

Phone:	(714) 247-0024
Fax:	(714) 247-0025
Received:	02/13/12 10:00 AM
Analysis Date:	2/14/2012
Collected:	

Project: **Muir ES Building 7**

Test Report: Asbestos Analysis of Bulk Materials via EPA 600/R-93/116 and/or EPA 600/M4-82-020 Method(s) using Polarized Light Microscopy

			Non-Asbestos				Asbestos	
Sample	**Description**	**Appearance**	**%**	**Fibrous**	**%**	**Non-Fibrous**	**%**	**Type**
27 *121200559-0027*	Roof Penetration Mastic/Black - Rooftop At Pipe Penetration-West	Various Fibrous Heterogeneous	10% <1%	Cellulose Glass	90%	Non-fibrous (other)	**<1%**	**Chrysotile**
28 *121200559-0028*	Roof Penetration Mastic/Black - Rooftop At Pipe Penetration-East	Various Fibrous Heterogeneous	15% 2%	Cellulose Glass	83%	Non-fibrous (other)	**<1%**	**Chrysotile**

Analyst(s)

Amanda Lang (6) *Mike J. Williams (34)*
Carlos Rivadeneyra (9)

Michelle Wilson

Michelle Wilson, Laboratory Manager
or other approved signatory

EMSL maintains liability limited to cost of analysis. This report relates only to the samples reported and may not be reproduced, except in full, without written approval by EMSL. EMSL bears no responsibility for sample collection activities or analytical method limitations. Interpretation and use of test results are the responsibility of the client. This report must not be used by the client to claim product certification, approval, or endorsement by NVLAP, NIST or any agency of the federal government. Non-friable organically bound materials present a problem matrix and therefore EMSL recommends gravimetric reduction prior to analysis. Samples received in good condition unless otherwise noted. Estimated accuracy, precision and uncertainty data available upon request.
Samples analyzed by EMSL Analytical, Inc. Phoenix, AZ NVLAP Lab Code 200811-0, AZ0937

Initial report from 02/14/2012 09:57:46

THIS IS THE LAST PAGE OF THE REPORT.

APPENDIX B

LEAD XRF FIELD DATA AND RESULTS

XRF Lead-Based Paint Sampling Log

Client: SAUSD
Site: Muir Elementary School
Address: 1951 Mabury Street
Santa Ana, CA

Client Project #: NA
BEC Project #: 12014043.10
Inspector/Sampler: D. Mai Ha/H. Gonzalez
Date Sampled: 2/7/2012

BAINBRIDGE
Environmental Consultants

XLNo	Side	Building	Room	Source	Substrate	Color	Results mg/kg (ppm)
393	-	-	Calibration	-	-	Red	1.3
394	-	-	Calibration	-	-	Red	1.2
395	-	-	Calibration	-	-	Red	1.1
396	A	2	Exterior	Wall	Stucco	Tan	0.0
397	A	2	Exterior	Door	Metal	Red	0.00
398	A	2	Exterior	Door Frame	Metal	Red	0.00
399	A	2	Exterior	Gutter	Metal	Tan	0.01
400	B	2	Exterior	Door	Metal	White	0.00
401	B	2	Exterior	Door Frame	Metal	Tan	0.02
402	B	2	Exterior	Wall	Stucco	Tan	0.01
403	B	2	Exterior	Wall	Stucco	White	0.00
404	B	2	Exterior	Roll-up Door	Metal	Red	0.00
405	B	2	Exterior	Door Frame	Metal	Red	0.00
406	C	2	Exterior	Wall	Stucco	Tan	0.00
407	C	2	Exterior	Wall	Stucco	White	0.00
408	C	2	Girls Restroom	Door	Metal	Red	0.00

2670 North Main Street, Suite 320
Santa Ana, CA 92705

(714) 247-0024
Fax (714) 247-0025

XRF Lead-Based Paint Sampling Log

SAUSD – Muir Elementary School

BAINBRIDGE
Environmental Consultants

XLNo	Side	Building	Room	Source	Substrate	Color	Results mg/kg (ppm)
409	C	2	Girls Restroom	Door Frame	Metal	Red	0.00
410	D	2	Girls Restroom	Wall	4"x4" Ceramic Tile	White	0.002
411	C	2	Girls Restroom	Wall	4"x4" Ceramic Tile	Brown	0.17
412	D	2	Girls Restroom	Hand Dryer	Metal	White	0.00
413	C	2	Girls Restroom	Sink	Porcelain	White	0.00
414	A	2	Girls Restroom	Toilet	Porcelain	White	0.01
415	--	2	Girls Restroom	Partition	Metal	Red	0.00
416	--	2	Girls Restroom	Ceiling	Plaster	White	0.00
417	B	2	Outside Girls Restroom	Drinking Fountain	Porcelain	White	0.02
418	A	2	D-29	Wall	4"x4" Ceramic Tile	Tan	0.17
419	A	2	D-29	Sink	Porcelain	White	0.00
420	C	2	Multi-purpose Room	Wall	Compressed Wood	White	0.00
421	D	2	Multi-purpose Room	Wall	Metal	Tan	0.00
422	A	2	Multi-purpose Room	Wall	Compressed Wood	Tan	0.00
423	B	2	Multi-purpose Room	Wall	Compressed Wood	Tan	0.00
424	C	2	Multi-purpose Room	Upper Wall	Drywall	White	0.00
425	--	2	Multi-purpose Room	Floor	6"x6" Ceramic Tile	Gray	0.00
426	B	2	Book Storage Room	Wall	Bulletin Board	Wood	0.00

2670 North Main Street, Suite 320
Santa Ana, CA 92705

(714) 247-0024
Fax (714) 247-0025

XRF Lead-Based Paint Sampling Log

SAUSD – Muir Elementary School

BAINBRIDGE
Environmental Consultants

XLNo	Side	Building	Room	Source	Substrate	Color	Results mg/kg (ppm)
427	C	2	PE Storage	Ladder	Metal	Gray	0.00
428	C	2	Special Education Room	Wall	Drywall	White	0.00
429	B	2	Special Education Room	Wall	Drywall	White	0.00
430	D	2	Special Education Room	Wall	Drywall	White	0.00
431	A	2	Special Education Room	Wall	Drywall	White	0.00
432	C	2	"Changing" Hallway	Wall	4"x4" Ceramic Tile	Tile	0.01
433	A	2	Room 118	Chalkboard	Metal	Green	0.00
434	D	2	Exterior	Window Frame	Metal	Tan	0.03
435	D	2	Room 117	Door	Metal	Red	0.00
436	D	2	Room 117	Door Frame	Metal	Tan	0.00
437	C	4	Exterior	Wall	Stucco	Tan	0.01
438	C	4	Exterior	Wall	Stucco	White	0.00
439	B	4	Exterior	Wall	Stucco	Tan	0.00
440	B	4	Exterior	Wall	Stucco	White	0.00
441	A	4	Exterior	Wall	Stucco	Tan	0.00
442	A	4	Exterior	Wall	Stucco	White	0.00
443	D	4	Exterior	Wall	Stucco	Tan	0.00
444	D	4	Exterior	Wall	Stucco	White	0.00

2670 North Main Street, Suite 320
Santa Ana, CA 92705

(714) 247-0024
Fax (714) 247-0025

XRF Lead-Based Paint Sampling Log

SAUSD – Muir Elementary School

BAINBRIDGE
Environmental Consultants

XLNo	Side	Building	Room	Source	Substrate	Color	Results mg/kg (ppm)
445	B	4	Exterior	Gutter	Metal	Tan	0.01
446	C	4	Room 103	Door	Metal	Red	0.00
447	C	4	Room 103	Door Frame	Metal	Tan	0.00
448	A	4	Room 103	Wall	Drywall	Gray	0.00
449	B	4	Room 103	Wall	Drywall	Gray	0.00
450	C	4	Room 103	Wall	Drywall	Gray	0.00
451	D	4	Room 103	Wall	Drywall	Gray	0.00
452	B	4	Room 103-Boy's Restroom	Wall	4"x4" Ceramic Tile	Tan	0.02
453	B	4	Room 103-Boy's Restroom	Wall	Plaster	White	0.00
454	D	4	Room 103-Boy's Restroom	Sink	Porcelain	White	0.00
455	C	4	Room 103-Boy's Restroom	Toilet	Toilet	White	0.01
456	--	4	Room 103-Boy's Restroom	Floor	2"x2" Ceramic Tile	Brown	0.01
457	A	4	Room 103-Boy's Restroom	Door	Wood	Red	0.00
458	A	4	Room 103-Boy's Restroom	Door Frame	Metal	Brown	0.00
459	C	4	Room 102-Boy's Restroom	Wall	4"x4" Ceramic Tile	White	0.01
460	C	4	Room 102-Boy's Restroom	Wall	4"x4" Ceramic Tile	Brown	0.22
461	A	4	Room 102-Boy's Restroom	Wall	4"x4" Ceramic Tile	Tan	0.03
462	D	4	Custodian Room	Sink	Porcelain	White	0.00

2670 North Main Street, Suite 320
Santa Ana, CA 92705

(714) 247-0024
Fax (714) 247-0025

XRF Lead-Based Paint Sampling Log

SAUSD – Muir Elementary School

BAINBRIDGE
Environmental Consultants

XLNo	Side	Building	Room	Source	Substrate	Color	Results mg/kg (ppm)
463	A	4	Mechanical Room	Door	Metal	Tan	0.00
464	A	4	Mechanical Room	Door Frame	Metal	Brown	0.00
465	A	6	Exterior	Wall	Stucco	White	0.07
466	A	6	Exterior	Wall	Stucco	Tan	0.02
467	A	6	Room 108	Door	Wood	Red	0.18
468	A	6	Room 108	Exterior Door Frame	Wood	Tan	0.25
469	A	6	Room 108	Interior Door Frame	Wood	Dark Green	0.90
470	**A**	**6**	**Exterior**	**Drinking Fountain Wall**	**4"X4" Ceramic Tile**	**Green**	**7.8**
471	A	6	Exterior	Drinking Fountain	Porcelain	White	0.00
472	B	6	Exterior	Wall	Stucco	White	0.00
473	B	6	Exterior	Wall	Stucco	Tan	0.01
474	C	6	Exterior	Wall	Stucco	White	0.07
475	C	6	Exterior	Wall	Stucco	Tan	0.02
476	D	6	Exterior	Wall	Stucco	White	0.01
477	D	6	Exterior	Wall	Stucco	Tan	0.01
478	C	6	Girl's Restroom	Wall	2'x4' Wall Panel	White	0.00
479	C	6	Girl's Restroom	Sink	Porcelain	White	0.01

2670 North Main Street, Suite 320
Santa Ana, CA 92705

(714) 247-0024
Fax (714) 247-0025

XRF Lead-Based Paint Sampling Log

SAUSD – Muir Elementary School

BAINBRIDGE
Environmental Consultants

XLNo	Side	Building	Room	Source	Substrate	Color	Results mg/kg (ppm)
480	A	6	Girl's Restroom	Door	Metal	Red	0.7
481	A	6	Girl's Restroom	Door Frame	Wood	Brown	0.8
482	A	6	Boy's Restroom	Sink	Porcelain	White	0.02
483	A	6	Boy's Restroom	Urinal	Porcelain	White	0.04
484	C	6	Boy's Restroom	Toilet	Porcelain	White	0.01
485	B	6	Electrical Room	Electric Panel	Metal	Gray	0.00
486	D	6	Room 112B	Wall	Drywall	White	0.00
487	A	6	Room 112B	Wall	Drywall	White	0.05
488	B	6	Room 112B	Wall	Drywall	White	0.00
489	C	6	Room 112B	Wall	Drywall	White	0.01
490	D	6	Room 112B	Sink	Porcelain	White	0.01
491	B	6	Room 112B	Toilet	Porcelain	White	0.01
492	C	6	Room 112B	Door	Wood	White	0.10
493	C	6	Room 112B	Door Frame	Wood	Green	0.08
494	B	6	Room 112B-Hallway	Bulletin Board	Wood	Light Green	0.00
495	C	6	Room 106	Door	Wood	White	0.02
496	D	6	Room 107	Chalkboard Board	Wood	Green	0.16
497	D	6	Room 107	Window Frame	Wood	Green	0.5

2670 North Main Street, Suite 320
Santa Ana, CA 92705

(714) 247-0024
Fax (714) 247-0025

XRF Lead-Based Paint Sampling Log

SAUSD – Muir Elementary School

BAINBRIDGE
Environmental Consultants

XLNo	Side	Building	Room	Source	Substrate	Color	Results mg/kg (ppm)
498	D	6	Room 107	Wall	Drywall	White	0.09
499	A	6	Room 107	Wall	Drywall	White	0.01
500	B	6	Room 107	Wall	Drywall	White	0.00
501	C	6	Room 107	Wall	Drywall	White	0.25
502	D	6	Room 107	Sink Wall	Drywall	Red	0.6
503	B	2	Exterior	Wall	6”x6” Ceramic Tile	Multi-color	0.00
504	--	2	Exterior	Ground	Cement	Multi-color	0.02
505	B	7	Exterior	Wall	Stucco	White	0.04
506	B	7	Exterior	Wall	Stucco	Tan	0.02
507	B	7	Exterior	Door	Wood	Red	0.12
508	B	7	Exterior	Door Frame	Wood	Tan	0.12
509	C	7	Exterior	Wall	Stucco	White	0.01
510	C	7	Exterior	Wall	Stucco	Tan	0.00
511	B	7	Exterior	Drinking Fountain Splashguard	Porcelain	White	0.00
512	B	7	Exterior	Drinking Fountain	Porcelain	White	0.00
513	B	7	Boy’s Restroom	Door	Metal	Red	0.02
514	B	7	Boy’s Restroom	Door Frame	Wood	Brown	0.07
515	D	7	Boy’s Restroom	Sink	Porcelain	White	0.03

2670 North Main Street, Suite 320
Santa Ana, CA 92705

(714) 247-0024
Fax (714) 247-0025

XRF Lead-Based Paint Sampling Log

SAUSD – Muir Elementary School

BAINBRIDGE
Environmental Consultants

XLNo	Side	Building	Room	Source	Substrate	Color	Results mg/kg (ppm)
516	B	7	Boy's Restroom	Urinal	Porcelain	White	0.04
517	C	7	Boy's Restroom	Toilet	Porcelain	White	0.02
518	D	7	Exterior	Wall	Stucco	Tan	0.02
519	D	7	Exterior	Wall	Stucco	White	0.02
520	A	7	Exterior	Wall	Stucco	Tan	0.02
521	A	7	Exterior	Wall	Stucco	White	0.04
522	B	7	Exterior	Water Fountain	Porcelain	White	0.00
523	**B**	**7**	**Custodial Closet**	**Mop Sink**	**Porcelain**	**White**	**4.0**
524	B	7	Custodial Closet	Ladder	Metal	Brown	0.15
525	B	7	Custodial Closet	Pipe	Metal	Yellow	0.03
526	A	7	Room 129	Wall	Particle	Brown	0.01
527	B	7	Room 129	Wall	Particle	Brown	0.00
528	C	7	Room 129	Wall	Particle	Off-White	0.01
529	D	7	Room 129	Wall	Particle	Brown	0.02
530	**D**	**7**	**Entry**	**Door**	**Wood**	**Red**	**1.0**
531	D	7	Entry	Door Frame	Wood	Off-White	0.9
532	C	7	Storage	Door	Wood	Tan	0.12
533	C	7	Storage	Door Frame	Wood	Dark Gray	0.7

2670 North Main Street, Suite 320
Santa Ana, CA 92705

(714) 247-0024
Fax (714) 247-0025

XRF Lead-Based Paint Sampling Log

SAUSD – Muir Elementary School

BAINBRIDGE
Environmental Consultants

XLNo	Side	Building	Room	Source	Substrate	Color	Results mg/kg (ppm)
534	A	7	Room 123	Window Frame	Wood	Off-White	0.8
535	A	7	Room 123	Door	Wood	Red	0.4
536	A	7	Room 123	Door Frame	Wood	Off-White	0.01
537	D	7	Room 124	Door	Wood	Off-White	0.10
538	D	7	Room 124	Door Frame	Wood	Off-White	0.5
539	-	-	Calibration	-	-	Red	1.1
540	-	-	Calibration	-	-	Red	0.8
541	-	-	Calibration	-	-	Red	1.2

2670 North Main Street, Suite 320
Santa Ana, CA 92705

(714) 247-0024
Fax (714) 247-0025

XRF Lead-Based Paint Sampling Log

Client: SAUSD
Site: Muir ES Buildings 1,3, and 5
Address: 1951 Mabury Street
Santa Ana, Ca. 92705

Client Project #: NA
BEC Project #: 12014043.10
Inspector/Sampler: K. Cisco
Date Sampled: 2/7/2012

BAINBRIDGE
Environmental Consultants

XLNo	Side	Building	Room	Source	Substrate	Color	Results mg/kg (ppm)
1223	-	-	Calibration	-	-	Red	1.1
1224	-	-	Calibration	-	-	Red	1.4
1225	-	-	Calibration	-	-	Red	1.0
1226	C	3	Service Line	Wall Panel-South	Plastic	Beige	0.00
1227	A	3	Food Service	Wall Panel-North	Plastic	Beige	0.00
1228	A	3	Service Line	Freezer Door-North	Steel	Gray	0.00
1229	A	3	Service Line	Floor	4" Ceramic Tile	Gray	0.00
1230	B	3	Food Service	Floor	4" Ceramic Tile	Gray	0.01
1231	D	3	Food Service	Door-West	Metal	Red	0.00
1232	D	3	Service Line	Door-West	Metal	Red	0.00
1233	A	3	Kindergarten/Room 104	Door-North	Metal	Red	0.00
1234	B	3	Kindergarten/Room 105	Door-East	Metal	Red	0.00
1235	B	3	Service Line	Door Casing-East	Metal	Brown	0.00
1236	B	3	Play St.	Door Casing-East	Metal	Brown	0.00
1237	B	3	Kindergarten/Room 105	Door Casing-East	Metal	Brown	0.00
1238	D	3	Kindergarten/Room 104	Door Casing-West	Metal	Brown	0.00

2670 North Main Street, Suite 320
Santa Ana, CA 92705

(714) 247-0024
Fax (714) 247-0025

XRF Lead-Based Paint Sampling Log

SAUSD – Muir Elementary School

BAINBRIDGE
Environmental Consultants

XLNo	Side	Building	Room	Source	Substrate	Color	Results mg/kg (ppm)
1239	D	3	Food Service	Mop Sink	Porcelain	White	0.04
1240	D	3	Food Service Toilet	Toilet	Porcelain	White	0.10
1241	D	3	Food Service Toilet	Sink	Porcelain	White	0.00
1242	D	3	Food Service	Wash Sink	Porcelain	White	0.00
1243	D	3	Food Service	Closet	Lockers	Blue	0.00
1244	D	3	Kindergarten/Room 104	Wall-Panel-West	Plastic	Gray	0.00
1245	C	3	Kindergarten/Room 104	Wall-Panel-South	Plastic	Gray	0.00
1246	C	3	Kindergarten/Room 105	Wall-Panel-South	Plastic	Gray	0.00
1247	D	3	Kindergarten/Room 105	Wall-Panel-West	Plastic	Gray	0.00
1248	C	3	Kindergarten/Room 104	Floor at Sink	12" Floor Tile	Gray	0.00
1249	B	3	Kindergarten/Room 104	Restroom Wall-East	4" Ceramic Tile	White	0.06
1250	D	3	Kindergarten/Room 104	Restroom Wall-West	4" Ceramic Tile	White	0.05
1251	B	3	Kindergarten/Room 105	Restroom Wall-East	4" Ceramic Tile	White	0.03
1252	D	3	Kindergarten/Room 105	Restroom Wall-West	4" Ceramic Tile	White	0.04
1253	B	3	Kindergarten/Room 104	Restroom Floor-East	1" Ceramic Tile	Gray	0.00
1254	D	3	Kindergarten/Room 104	Restroom Floor-West	1" Ceramic Tile	Gray	0.00
1255	B	3	Kindergarten/Room 105	Restroom Floor-East	1" Ceramic Tile	Gray	0.00
1256	D	3	Kindergarten/Room 105	Restroom Floor-West	1" Ceramic Tile	Gray	0.00

2670 North Main Street, Suite 320
Santa Ana, CA 92705

(714) 247-0024
Fax (714) 247-0025

XRF Lead-Based Paint Sampling Log

SAUSD – Muir Elementary School

BAINBRIDGE
Environmental Consultants

XLNo	Side	Building	Room	Source	Substrate	Color	Results mg/kg (ppm)
1257	B	3	Kindergarten/Room 104	Restroom Threshold	Terrazzo	White	0.01
1258	B	3	Kindergarten/Room 104	Restroom Sink	Porcelain	White	0.00
1259	D	3	Kindergarten/Room 105	Restroom Toilet	Porcelain	White	0.01
1260	D	3	Mech. Room	Door	Metal	White	0.00
1261	D	3	Mech. Room	Wall-West	Drywall	White	0.00
1262	D	3	Elect. Room	Door	Metal	White	0.00
1263	D	3	Elect. Room	Wall-West	Drywall	White	0.00
1264	D	3	Elect. Room	4" Pipe-run	Metal	White	0.00
1265	D	3	Exterior	Wall-West	Stucco	Beige	0.00
1266	A	3	Exterior	Wall-North	Stucco	Beige	0.00
1267	B	3	Exterior	Wall-East	Stucco	Beige	0.00
1268	C	3	Exterior	Wall-South	Stucco	Beige	0.00
1269	D	3	Exterior	Gutter Downspout	Metal	Beige	0.04
1270	C	3	Exterior	Water Fountain	Porcelain	White	0.00
1271	B	1	Principal Office	Wall-East	Drywall	White	0.00
1272	D	1	Hallway	Wall-West	Drywall	White	0.00
1273	B	1	Teacher's Lounge	Wall-East	Drywall	White	0.00
1274	A	1	Tele. Room	Wall-North	Drywall	White	0.01

2670 North Main Street, Suite 320
Santa Ana, CA 92705

(714) 247-0024
Fax (714) 247-0025

XRF Lead-Based Paint Sampling Log

SAUSD – Muir Elementary School

BAINBRIDGE
Environmental Consultants

XLNo	Side	Building	Room	Source	Substrate	Color	Results mg/kg (ppm)
1293	A	1	Men's Restroom	Floor	1" Ceramic Tile	Brown	0.00
1294	A	1	Women's Restroom	Floor	1" Ceramic Tile	Brown	0.00
1295	A	1	Women's Restroom	Sink	Porcelain	White	0.01
1296	A	1	Women's Restroom	Toilet	Porcelain	White	0.11
1297	A	1	Men's Restroom	Sink	Porcelain	White	0.02
1298	A	1	Men's Restroom	Toilet	Porcelain	White	0.11
1299	C	1	Waiting Room	Floor	6" Ceramic Tile	Gray	0.00
1300	C	1	Waiting Room	Floor	6" Ceramic Tile	Gray	0.00
1301	A	1	Exterior	Wall-North	Stucco	Beige	0.00
1302	B	1	Exterior	Wall-East	Stucco	Beige	0.00
1303	C	1	Exterior	Wall-South	Stucco	Beige	0.00
1304	D	1	Exterior	Wall-West	Stucco	Beige	0.00
1305	B	1	Exterior	Gutter Downspout	Metal	Beige	0.01
1306	A	5	Exterior	Wall-North	Stucco	Beige	0.00
1307	B	5	Exterior	Wall-East	Stucco	Beige	0.00
1308	C	5	Exterior	Wall-West	Stucco	Beige	0.00
1309	D	5	Exterior	Wall-South	Stucco	Beige	0.00
1310	A	5	Classroom 114	Wall Panel-North	Plastic	Gray	0.00

2670 North Main Street, Suite 320
Santa Ana, CA 92705

(714) 247-0024
Fax (714) 247-0025

XRF Lead-Based Paint Sampling Log

SAUSD – Muir Elementary School

BAINBRIDGE
Environmental Consultants

XLNo	Side	Building	Room	Source	Substrate	Color	Results mg/kg (ppm)
1275	B	1	Waiting Room	Wall Panel-East	Plastic	Gray	0.00
1276	A	1	Asst. Princ. Office	Wall Panel-North	Plastic	Gray	0.00
1277	C	1	Main Entrance	Double Door	Metal	Red	0.00
1278	D	1	Cot./Room 104	Door	Metal	Red	0.00
1279	A	1	Men's Restroom	Door	Metal	Red	0.00
1280	B	1	(East) Exit Door	Door	Metal	Red	0.00
1281	C	1	Main Entrance	Door Casing	Metal	Brown	0.00
1282	D	1	Cot./Room 104	Door Casing	Metal	Brown	0.00
1283	C	1	Principal Office	Interior Window Casing	Metal	Brown	0.00
1284	B	1	(East) Exit Door	Door Casing	Metal	Brown	0.00
1285	D	1	Nurse Office Restroom	Sink	Porcelain	White	0.00
1286	D	1	Nurse Office Restroom	Toilet	Porcelain	White	0.01
1287	D	1	Nurse Office Restroom	Basecove	6" Ceramic Tile	Beige	0.13
1288	D	1	Nurse Office Restroom	Floor	1" Ceramic Tile	Brown	0.00
1289	A	1	Women's Restroom	Wall-East	4" Ceramic Tile	Beige	0.04
1290	A	1	Women's Restroom	Wall-West	4" Ceramic Tile	Beige	0.03
1291	A	1	Men's Restroom	Wall-East	4" Ceramic Tile	Beige	0.02
1292	A	1	Men's Restroom	Wall-West	4" Ceramic Tile	Brown	0.02

2670 North Main Street, Suite 320
Santa Ana, CA 92705

(714) 247-0024
Fax (714) 247-0025

XRF Lead-Based Paint Sampling Log

SAUSD – Muir Elementary School

BAINBRIDGE
Environmental Consultants

XLNo	Side	Building	Room	Source	Substrate	Color	Results mg/kg (ppm)
1311	A	5	Classroom 115	Wall Panel-North	Plastic	Gray	0.00
1312	D	5	Classroom 113 Elect. Closet	Wall	Drywall	White	0.00
1313	C	5	Classroom 114 Elect. Closet	Wall	Drywall	White	0.00
1314	C	5	Classroom 115 Elect. Closet	Wall	Drywall	White	0.00
1315	B	5	Classroom 116 Elect. Closet	Wall	Drywall	White	0.00
1316	A	5	Classroom 113	Door	Metal	Red	0.00
1317	A	5	Classroom 114	Door	Metal	Red	0.00
1318	B	5	Classroom 115	Door	Metal	Red	0.03
1319	B	5	Classroom 116	Door	Metal	Red	0.00
1320	A	5	Classroom 113	Door Casing	Metal	Brown	0.00
1321	A	5	Classroom 114	Door Casing	Metal	Brown	0.02
1322	B	5	Classroom 115	Door Casing	Metal	Brown	0.03
1323	B	5	Classroom 116	Door Casing	Metal	Brown	0.04
1324	B	5	Exterior	Gutter Downspout	Metal	Beige	0.04
1325	C	5	Exterior	Window Casing	Aluminum	Beige	0.07
1326	A	5	Classroom 114	Entryway Flooring	12" Floor Tile	Gray	0.00
1327	-	-	Calibration	-	-	Red	1.3
1328	-	-	Calibration	-	-	Red	0.8

2670 North Main Street, Suite 320
Santa Ana, CA 92705

(714) 247-0024
Fax (714) 247-0025

XRF Lead-Based Paint Sampling Log

SAUSD – Muir Elementary School

BAINBRIDGE
Environmental Consultants

XLNo	Side	Building	Room	Source	Substrate	Color	Results
							mg/kg (ppm)
1329	-	-	Calibration	-	-	Red	0.8

2670 North Main Street, Suite 320
Santa Ana, CA 92705

(714) 247-0024
Fax (714) 247-0025

APPENDIX C

ASBESTOS AND LEAD INSPECTOR'S CERTIFICATES

State of California
Division of Occupational Safety and Health
Certified Asbestos Consultant

Name: Henry A Moreno
Certification No. 03-3494
Expires on 12/17/12

This certification was issued by the Division of Occupational Safety and Health as authorized by Sections 7180 et seq. of the Business and Professions Code.

State of California Department of Public Health
Lead-Related Construction Certificate

Certificate Type	Expiration Date
Inspector/Assessor	05/28/2012

18773
Henry A. Moreno
ID #: 9970

State of California
Division of Occupational Safety and Health
Certified Site Surveillance Technician

Name: Karlin Paul Cisco
Certification No. 05-3911
Expires on 01/18/13

This certification was issued by the Division of Occupational Safety and Health as authorized by Sections 7180 et seq. of the Business and Professions Code.

State of California Department of Public Health
Lead-Related Construction Certificate

Certificate Type	Expiration Date
Inspector/Assessor	02/26/2013

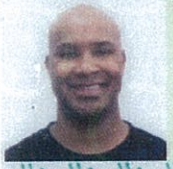

21230
Karlin P. Cisco
ID #: 18300

State of California
Division of Occupational Safety and Health
Certified Site Surveillance Technician

Name: Dan H Mai Ha
Certification No. 09-2693
Expires on 02/04/13

This certification was issued by the Division of Occupational Safety and Health as authorized by Sections 7180 et seq. of the Business and Professions Code.

State of California Department of Public Health
Lead-Related Construction Certificate

Certificate Type	Expiration Date
Project Monitor	06/22/2012

16830
Dan H. Mai Ha
ID #: 9967

State of California Department of Public Health
Lead-Related Construction Certificate

Certificate Type	Expiration Date
Sampling Technician	07/31/2012

22284
Hector E. Gonzalez
ID #: 22952

APPENDIX D

FLOOR PLANS

Bainbridge Environmental Asbestos Sample Location Drawing

Muir Elementary School
1951 Mabury Street
Santa Ana, CA 92705

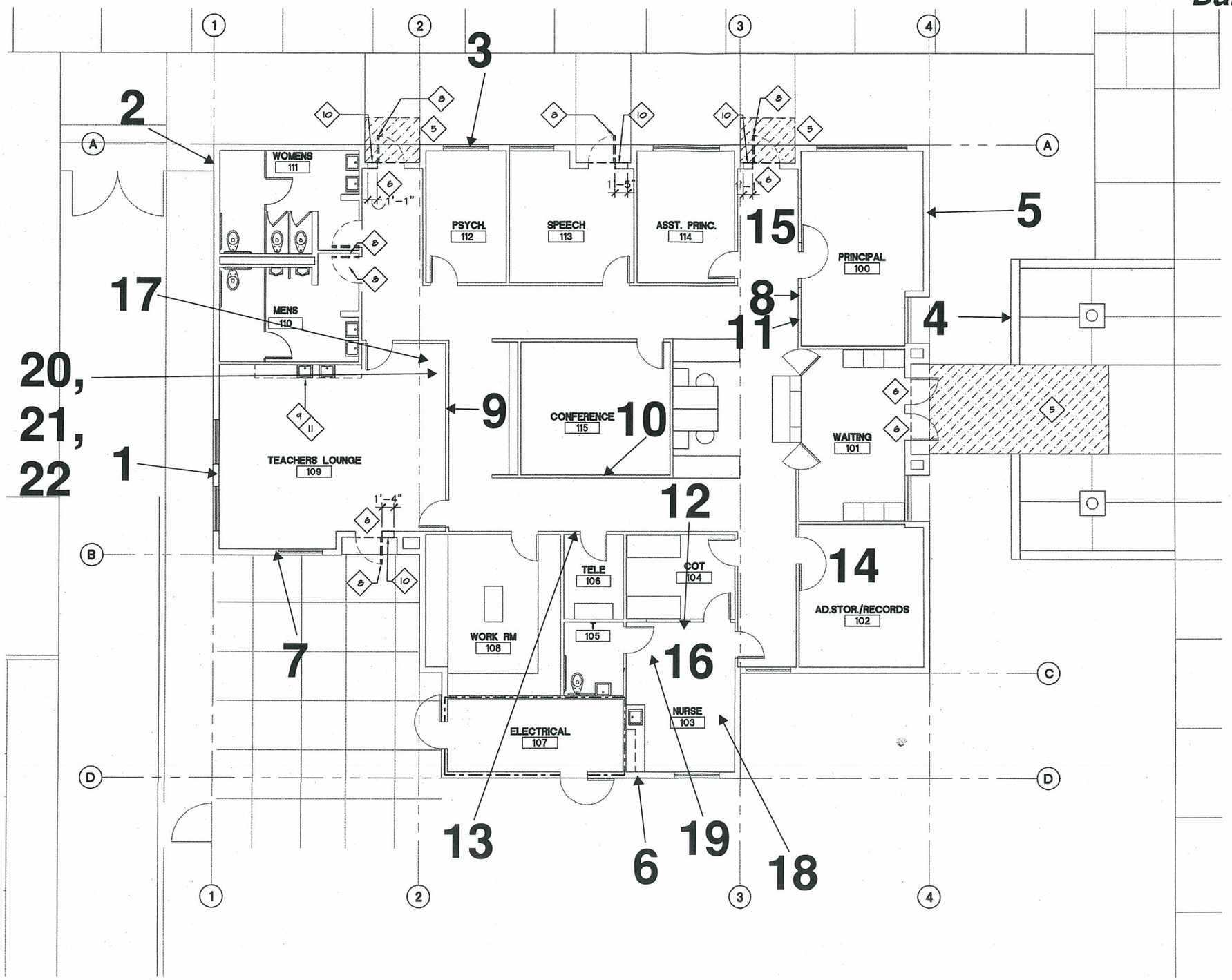

1 BUILDING 1 DEMOLITION PLAN

10021M_1_XFP01.dwg
SCALE: 1/8"=1'-0"

Bainbridge Environmental Lead Sample Location Drawing

Muir Elementary School
1951 Mabury Street
Santa Ana, CA 92705

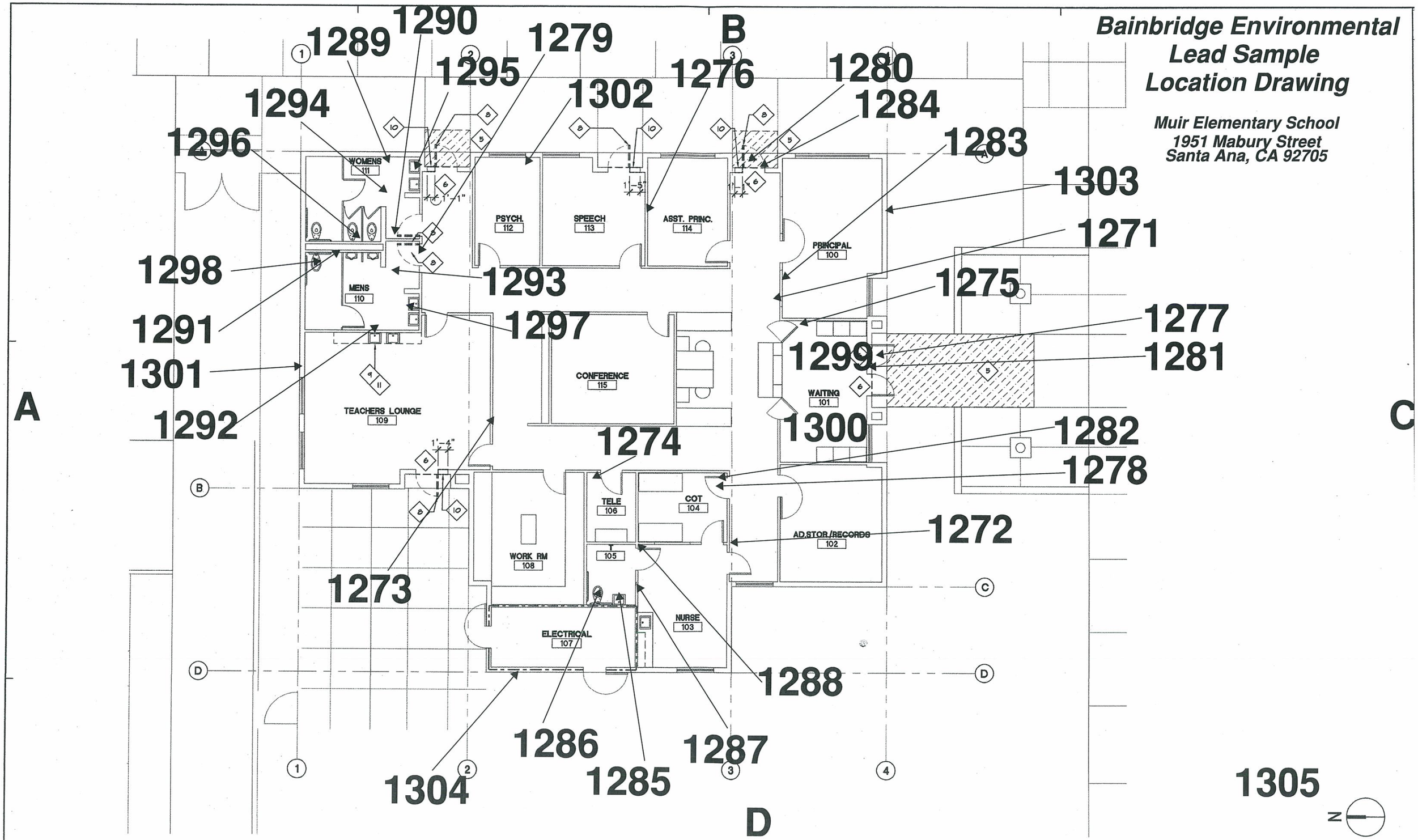

1 BUILDING 1 DEMOLITION PLAN

10021M_1_XFP01.dwg
SCALE: 1/8"=1'-0"

Bainbridge Environmental Asbestos Sample Location Drawing

Muir Elementary School
1951 Mabury Street
Santa Ana, CA 92705

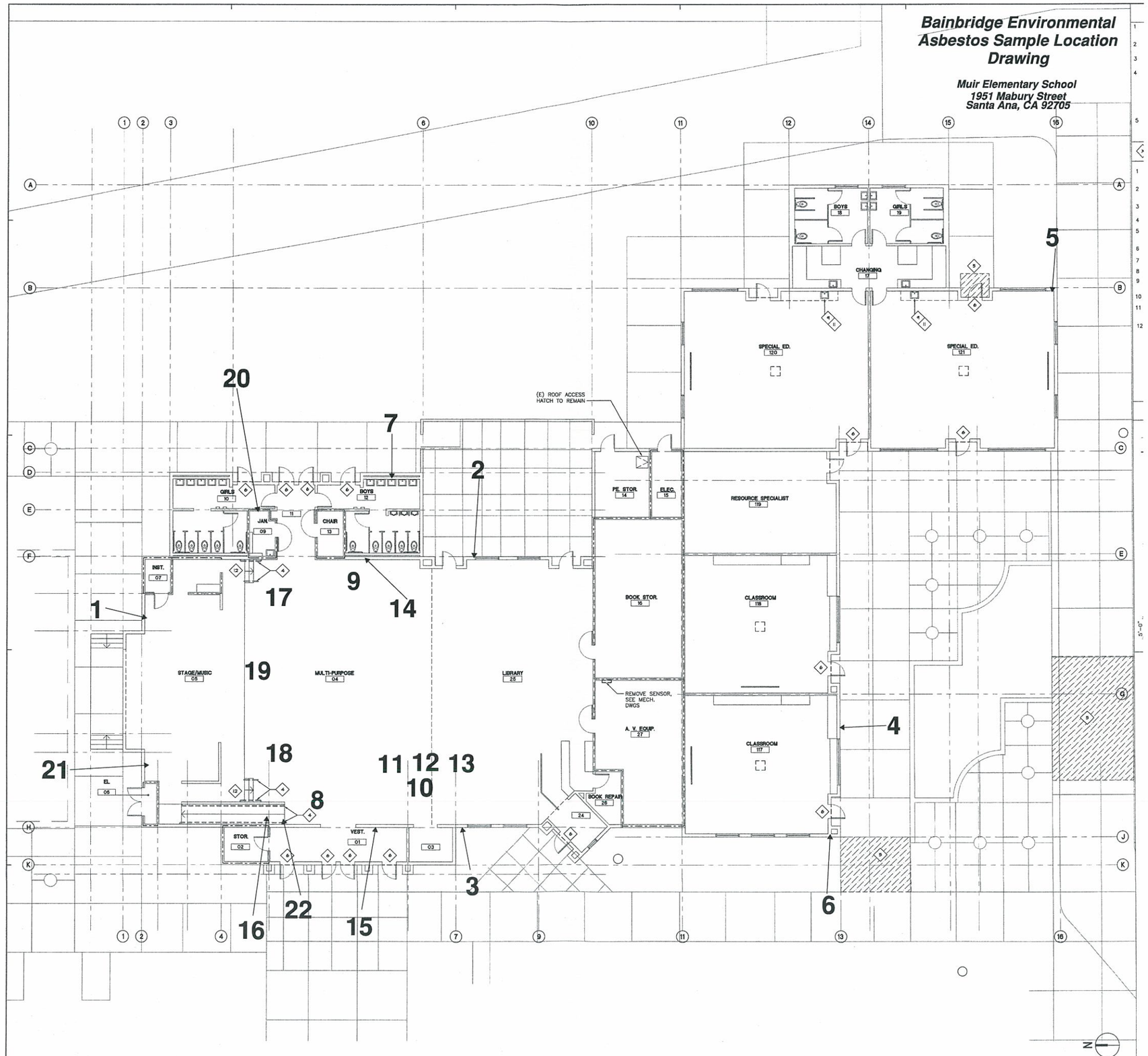

1 BUILDING 2 DEMOLITION PLAN

10021M_3_XFP01.dwg
SCALE: 1/8"=1'-0"

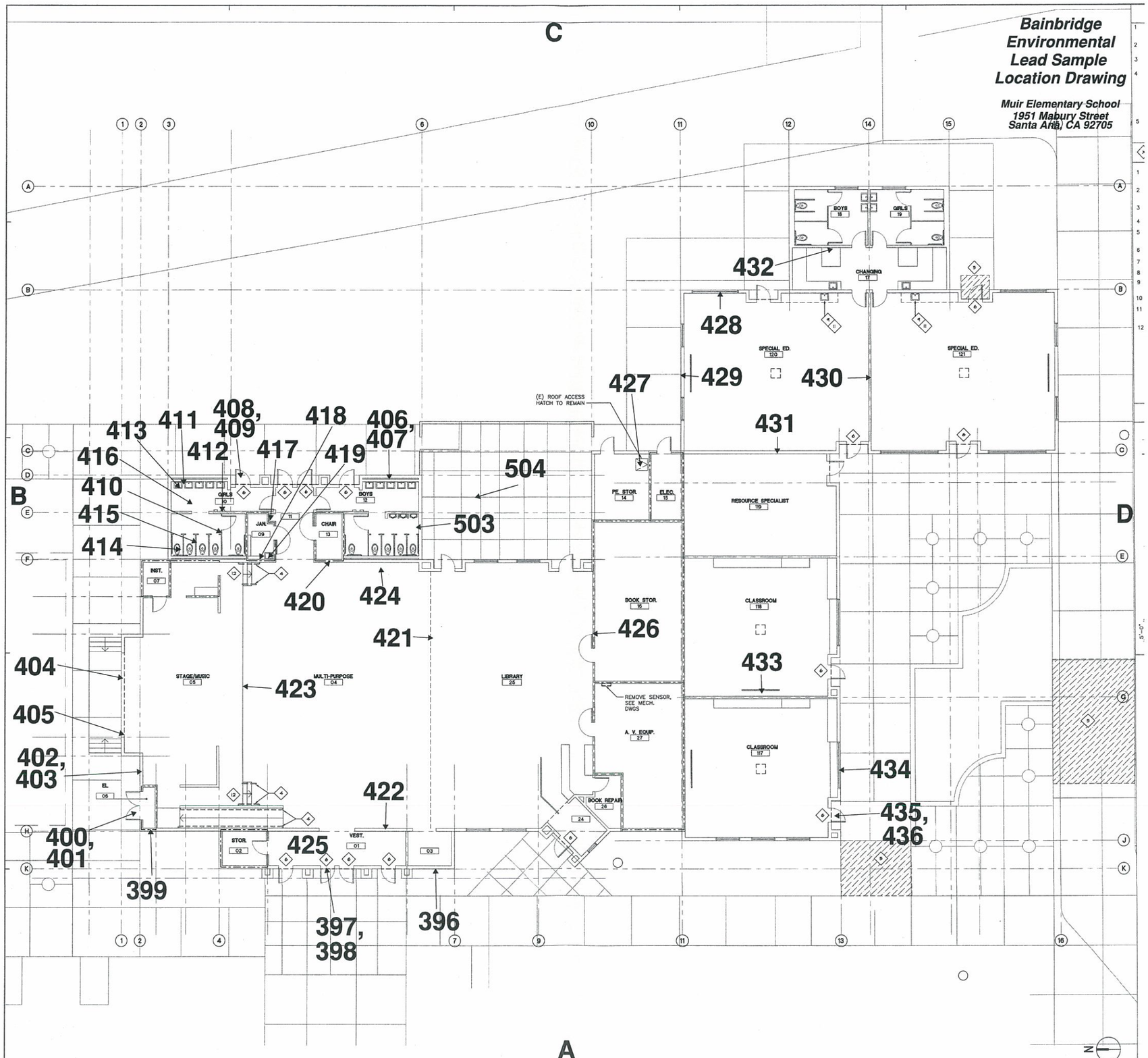
Bainbridge Environmental Lead Sample Location Drawing
Muir Elementary School
1951 Mabury Street
Santa Ana, CA 92705
C
B
D
A
432
428
429
430
431
427
(E) ROOF ACCESS HATCH TO REMAIN
504
503
426
433
434
435, 436
421
424
420
418
419
417
408, 409
406, 407
411
412
413
416
410
415
414
404
405
402, 403
400, 401
399
423
422
425
397, 398
396
BOYS 18
GIRLS 19
CHANGING 17
SPECIAL ED. 120
SPECIAL ED. 121
PE STOR. 14
ELEC. 15
RESOURCE SPECIALIST 119
GIRLS 10
JAN. 09
CHAIR 13
BOYS 12
INST. 07
STAGE/MUSIC 05
MULTI-PURPOSE 04
LIBRARY 25
BOOK STOR. 15
CLASSROOM 118
REMOVE SENSOR, SEE MECH. DWGS
A. V. EQUIP. 27
CLASSROOM 117
BOOK REPAIR 26
EL 06
STOR. 02
VEST. 01
03
24
N
1 BUILDING 2 DEMOLITION PLAN
0021M_3_XFP01.dwg
SCALE: 1/8"=1'-0"

Bainbridge Environmental Asbestos Sample Location Drawing

Sample numbers including "R" indicate roof samples.

Muir Elementary School
1951 Mabury Street
Santa Ana, CA 92705

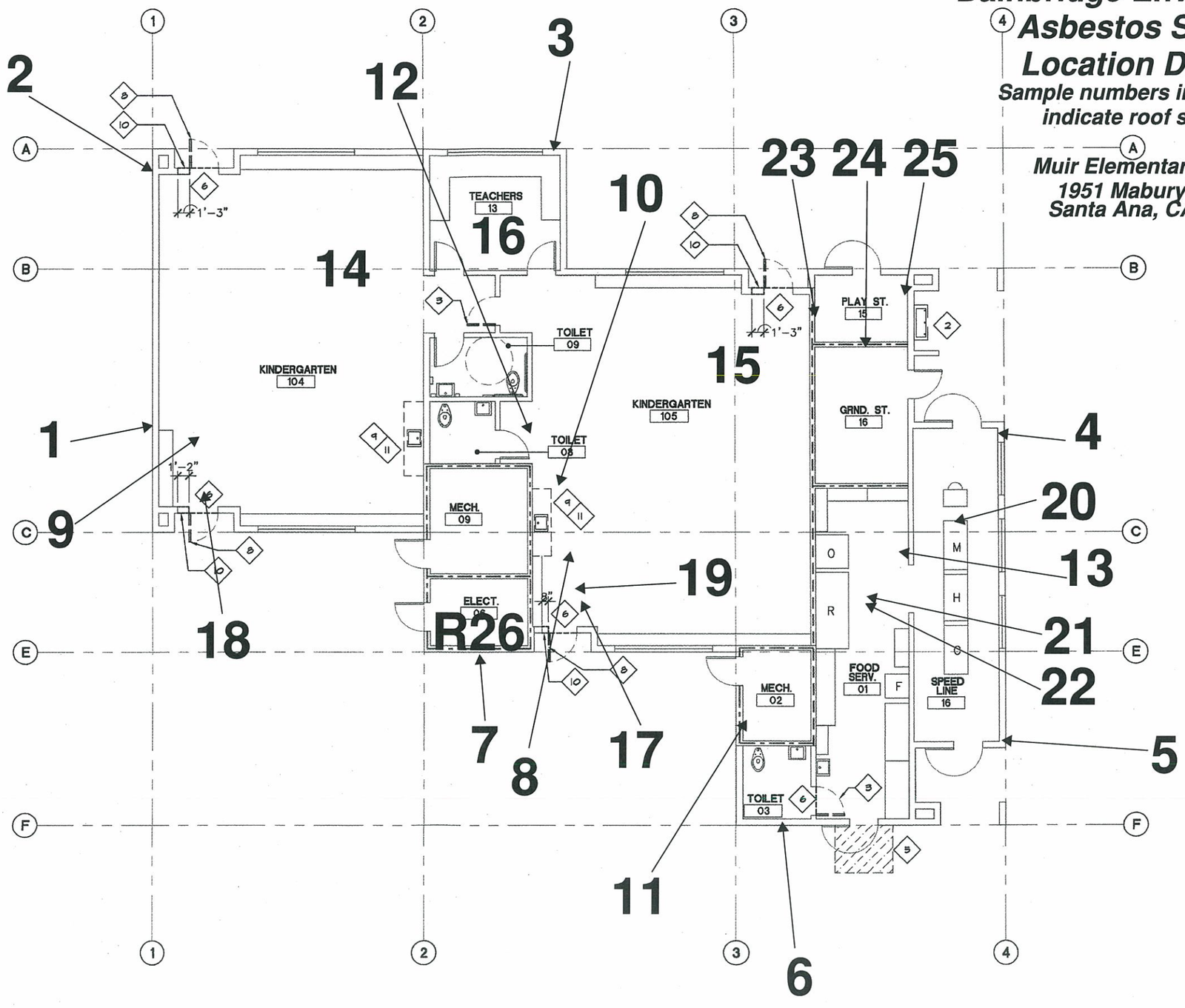

1 BUILDING 3 DEMOLITION PLAN

10021M_3_XFP01.dwg
SCALE: 1/8"=1'-0"

Bainbridge Environmental Lead Sample Location Drawing

Muir Elementary School
1951 Mabury Street
Santa Ana, CA 92705

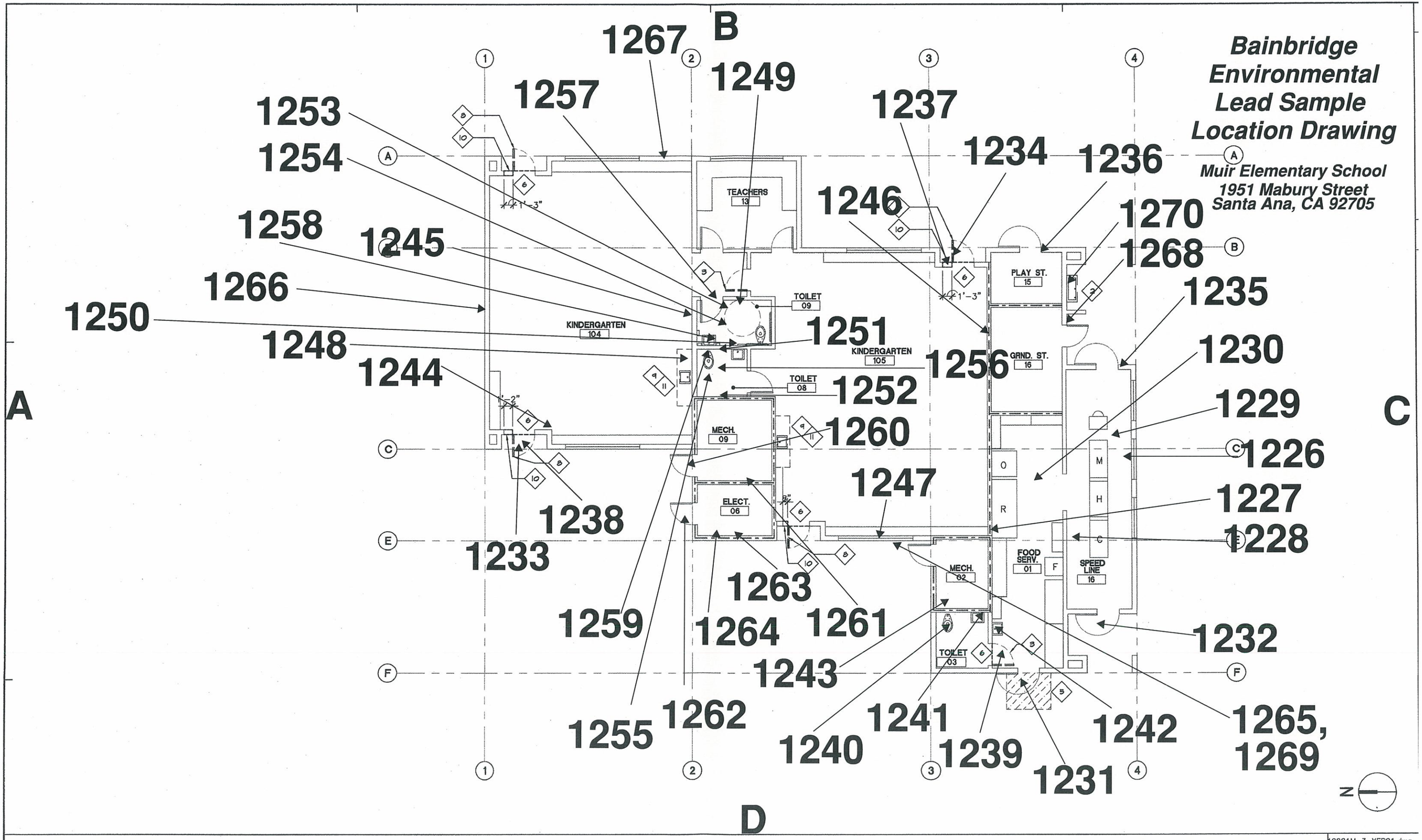

1 BUILDING 3 DEMOLITION PLAN

10021M_3_XFP01.dwg
SCALE: 1/8"=1'-0"

Bainbridge Environmental Asbestos Sample Location Drawing

Muir Elementary School
1951 Mabury Street
Santa Ana, CA 92705

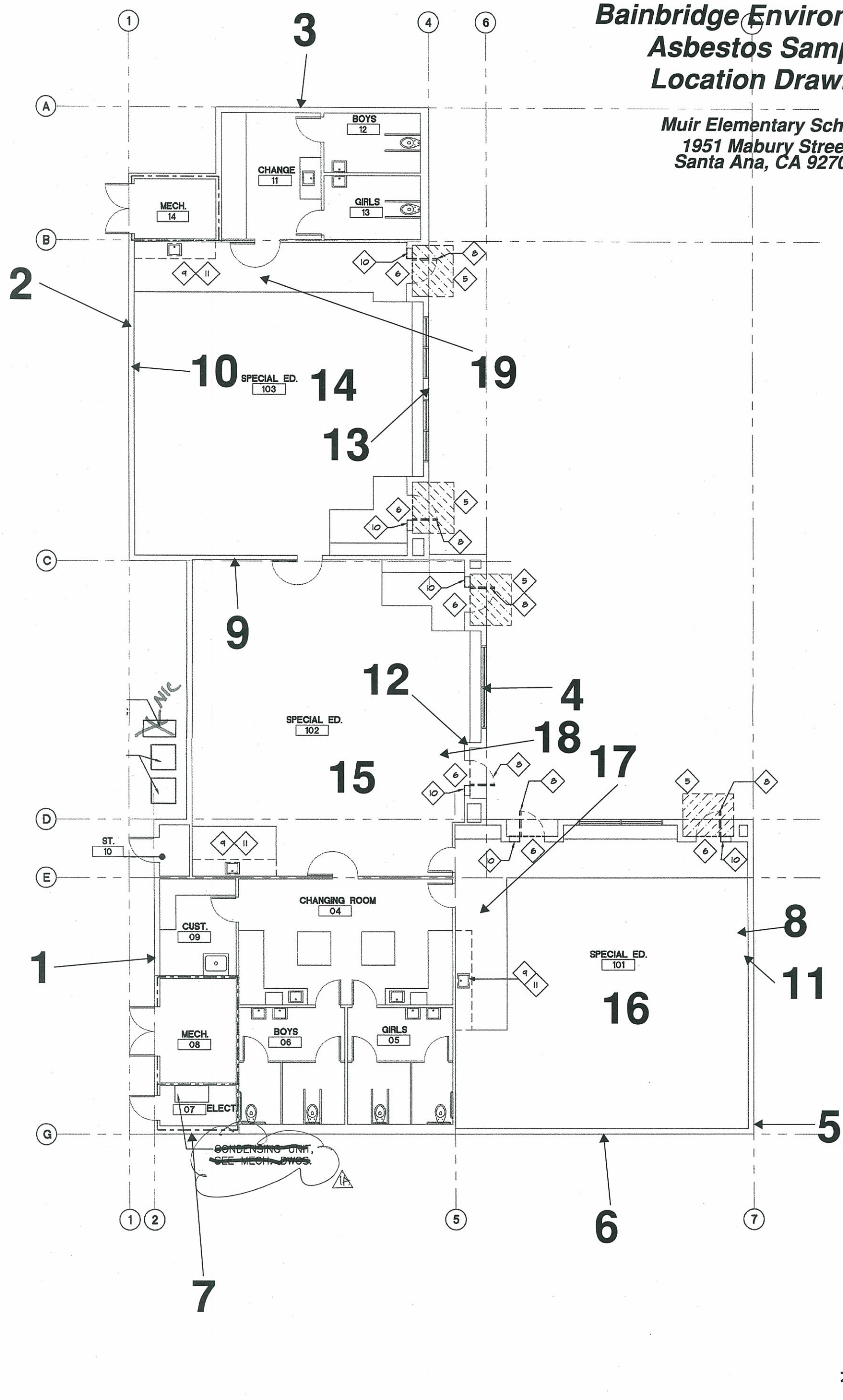

2 BUILDING 4 DEMOLITION PLAN

10021M_4_XFP01.dwg
SCALE: 1/8"=1'-0"

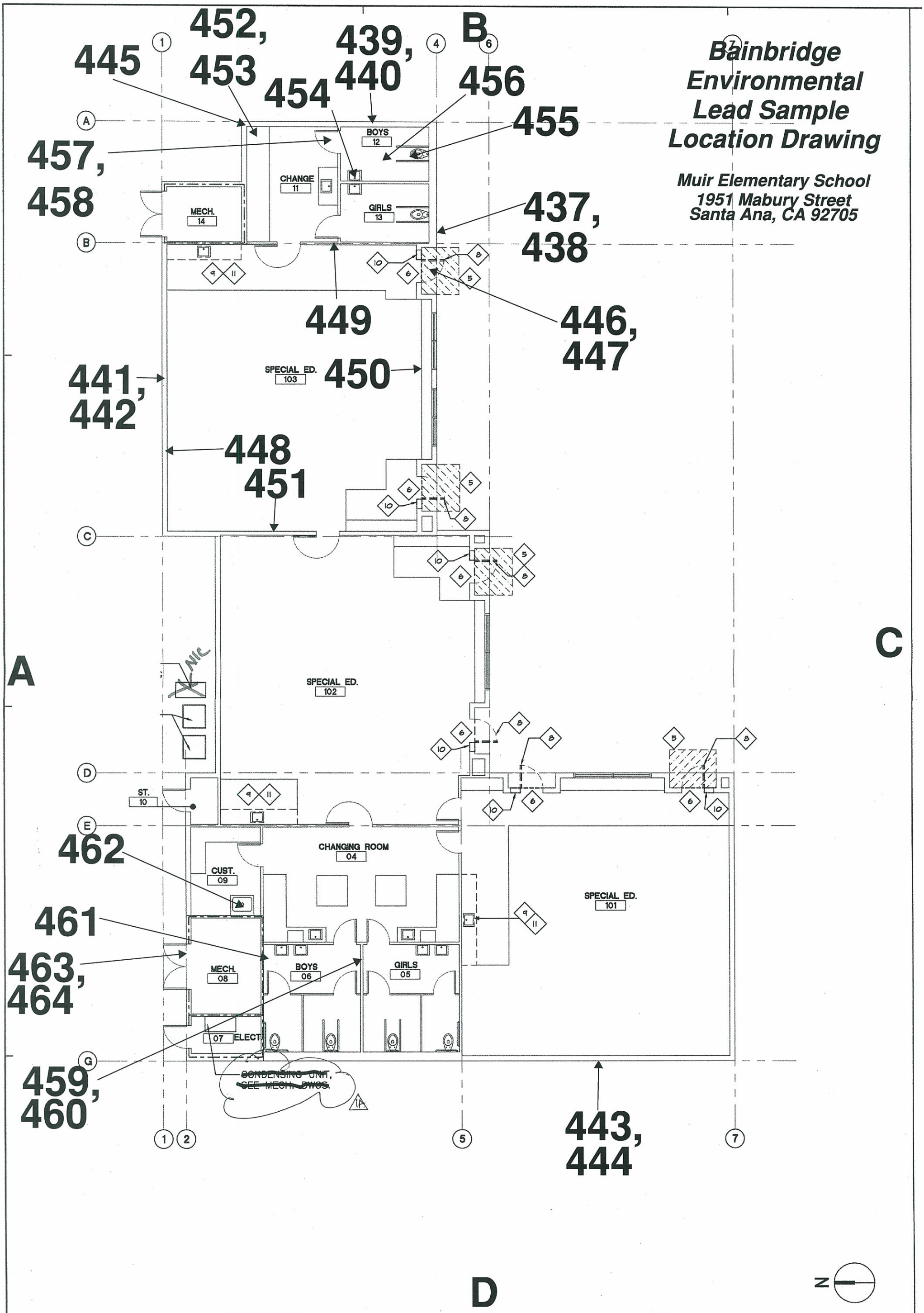

2 BUILDING 4 DEMOLITION PLAN

10021M_4_XFP01.dwg

SCALE: 1/8"=1'-0"

Bainbridge Environmental Asbestos Sample Location Drawing

Sample numbers including "R" indicate roof samples.

Muir Elementary School
1951 Mabury Street
Santa Ana, CA 92705

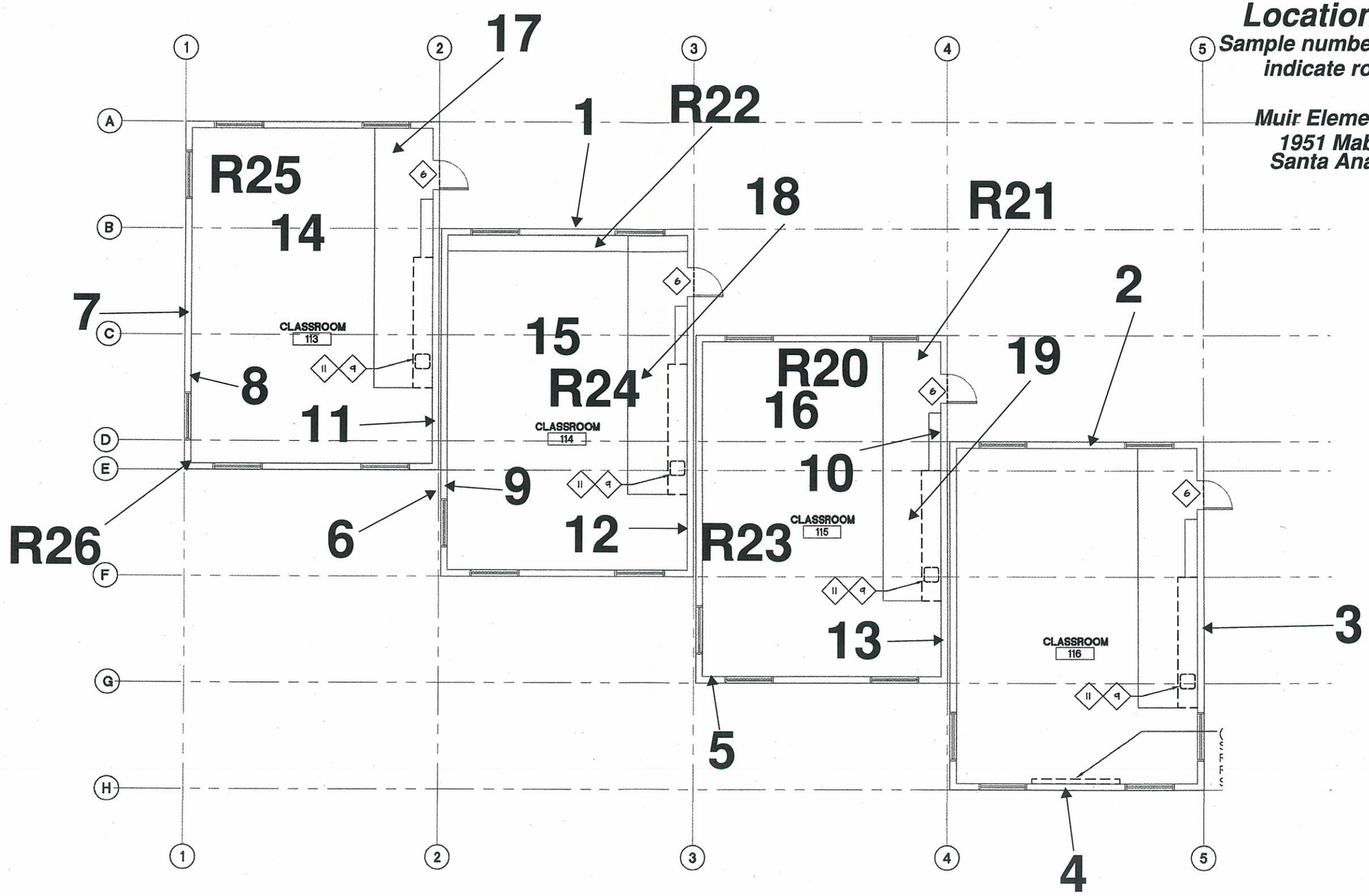

N

1 BUILDING 5 DEMOLITION PLAN

10021M_5_XFP01.dwg
SCALE: 1/8"=1'-0"

Bainbridge Environmental Lead Sample Location Drawing

Muir Elementary School
1951 Mabury Street
Santa Ana, CA 92705

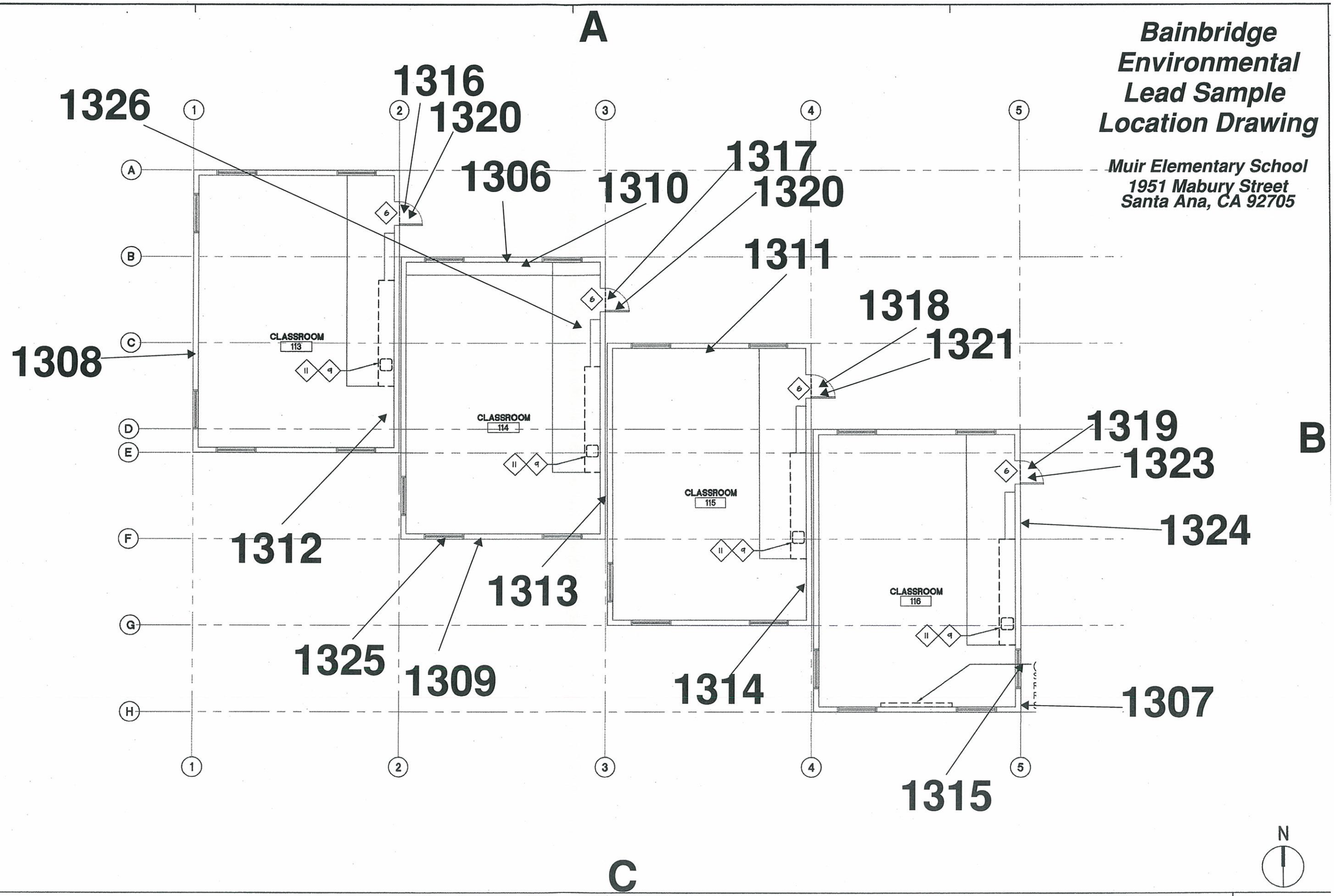

1 BUILDING 5 DEMOLITION PLAN

10021M_5_XFP01.dwg
SCALE: 1/8"=1'-0"

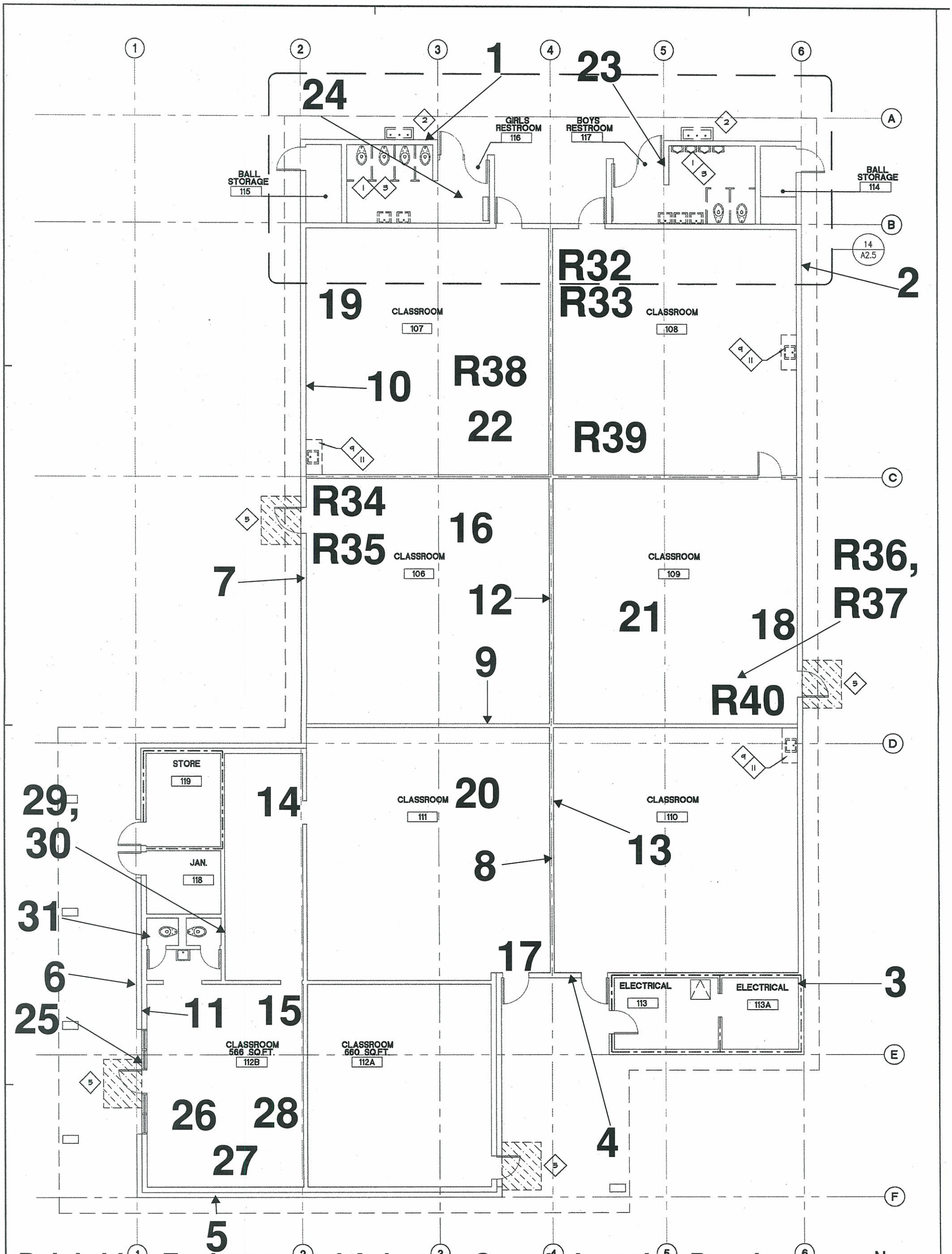

Bainbridge Environmental Asbestos Sample Location Drawing

Sample numbers including "R" indicate roof samples.

Muir Elementary School - 1951 Mabury Street, Santa Ana, CA 92705

2 BUILDING 6 DEMOLITION PLAN

10021M_6_XFP01.dwg

SCALE: 1/8"=1'-0"

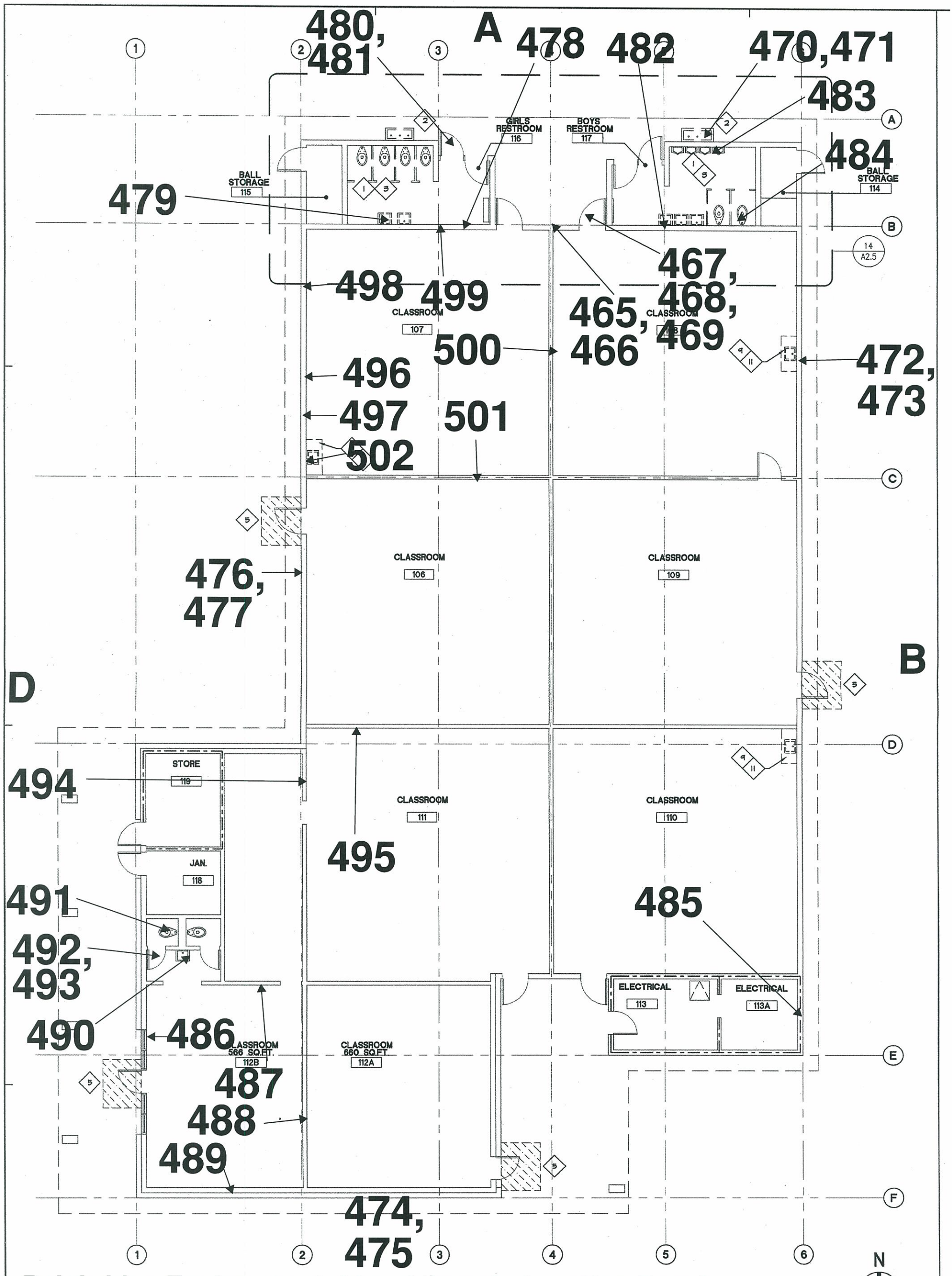

Bainbridge Environmental Lead Sample Location Drawing

Muir Elementary School - 1951 Mabury Street, Santa Ana, CA 92705

2 BUILDING 6 DEMOLITION PLAN

C

10021M_6_XFP01.dwg

SCALE: 1/8"=1'-0"

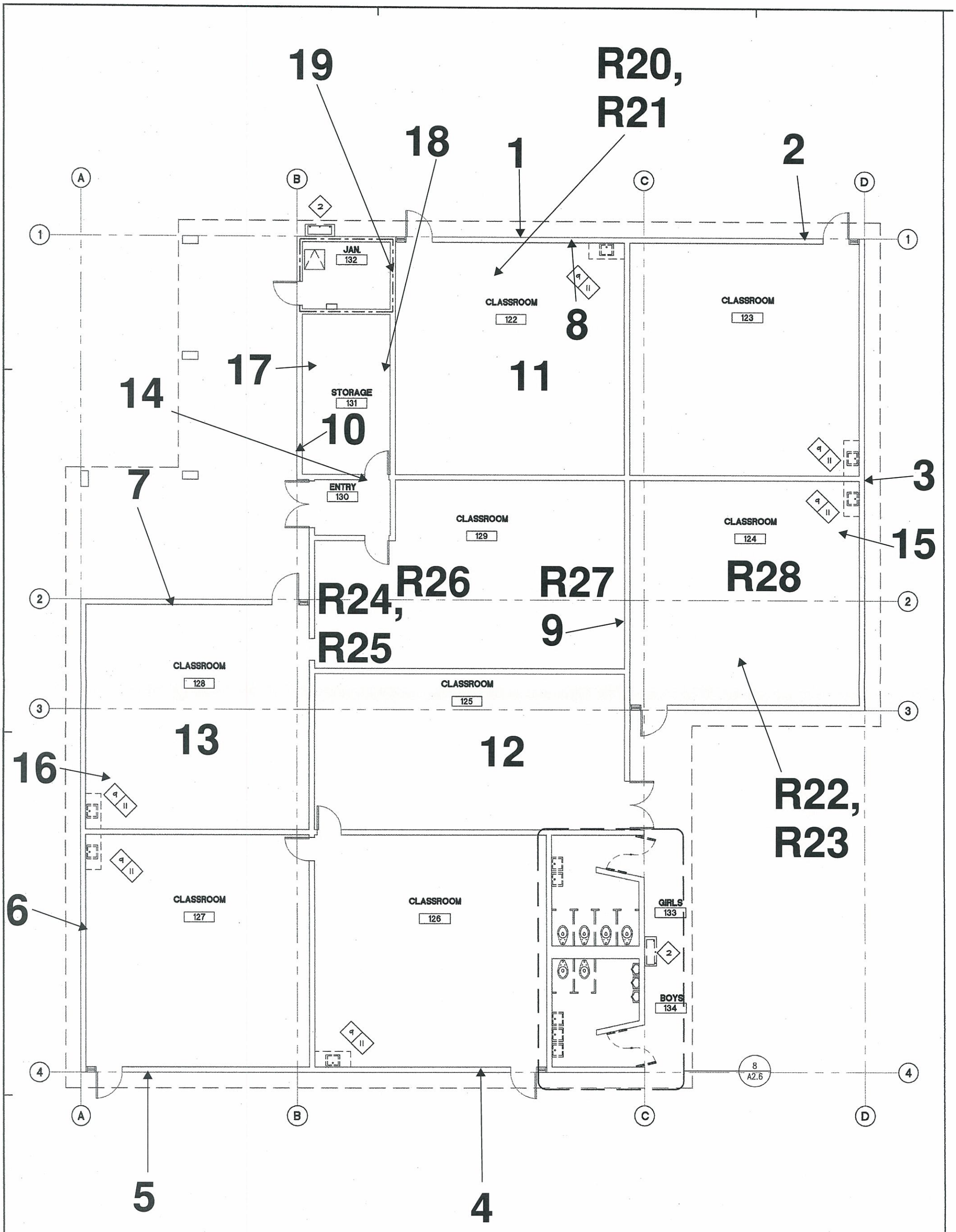

Bainbridge Environmental Asbestos Sample Location Drawing

Sample numbers including "R" indicate roof samples.

Muir Elementary School - 1951 Mabury Street, Santa Ana, CA 92705

N

2 BUILDING 7 DEMOLITION PLAN

10021M-A2.1.dwg

SCALE: 1/8"=1'-0"

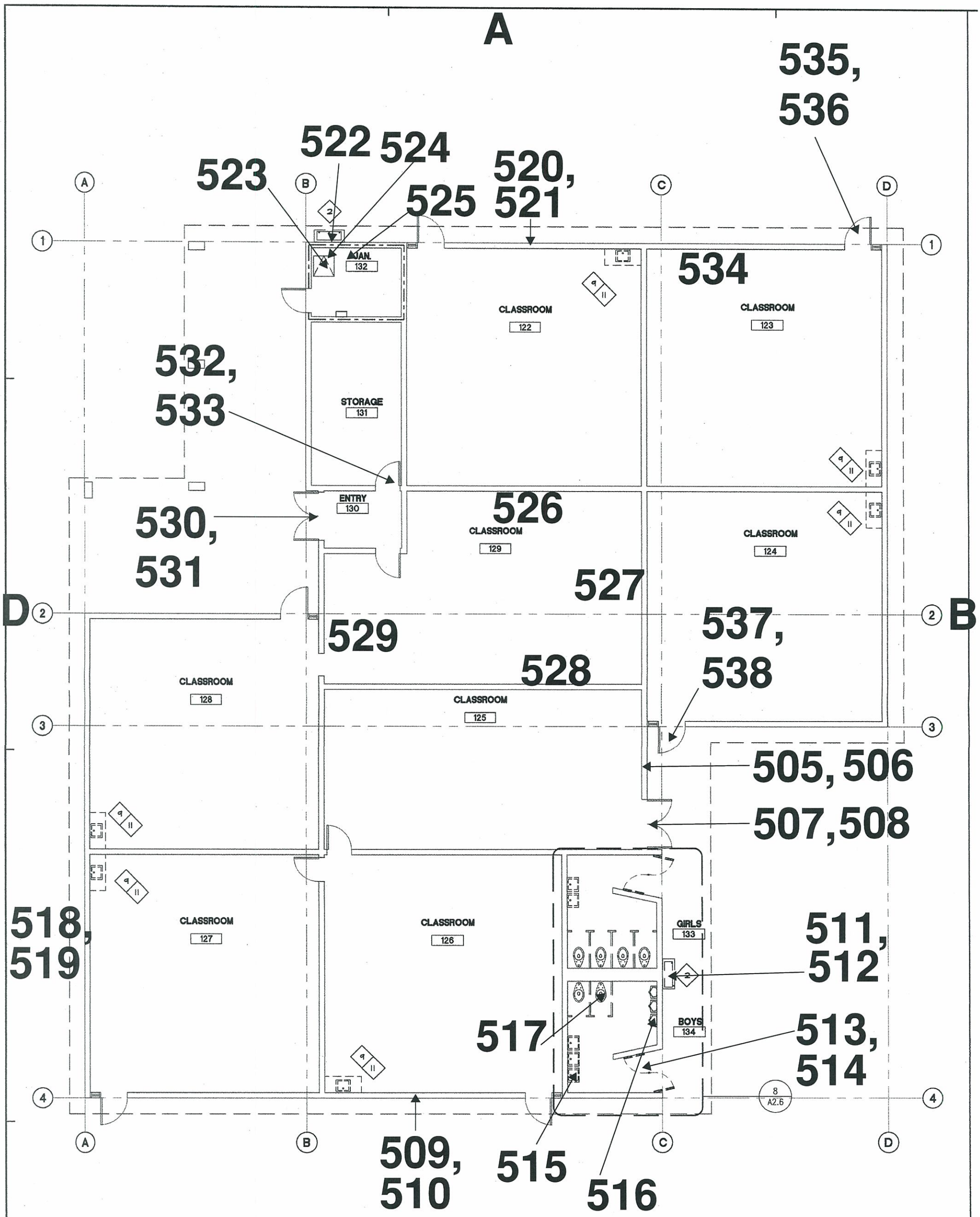

N

Bainbridge Environmental Lead Sample Location Drawing

Muir Elementary School - 1951 Mabury Street, Santa Ana, CA 92705

2 BUILDING 7 DEMOLITION PLAN

C

10021M-A2.1.dwg

SCALE: 1/8"=1'-0"